ON Semiconductor
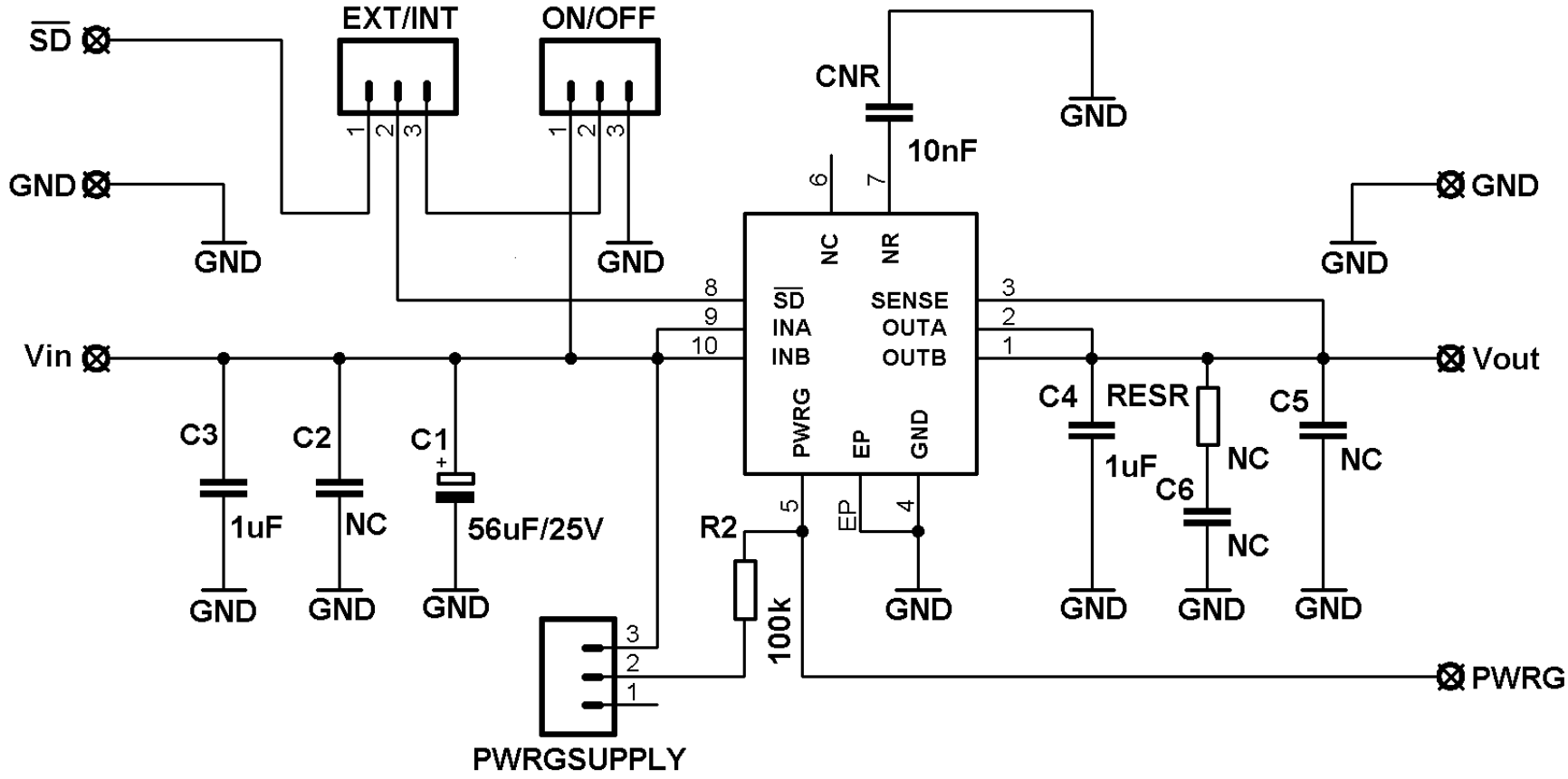
Schematic for the NCP3337 1V8 DFN10 LDO Demoboard