DRAWING MADE IN AMERICAN PROJECTION

NUMBER C-165302-E.

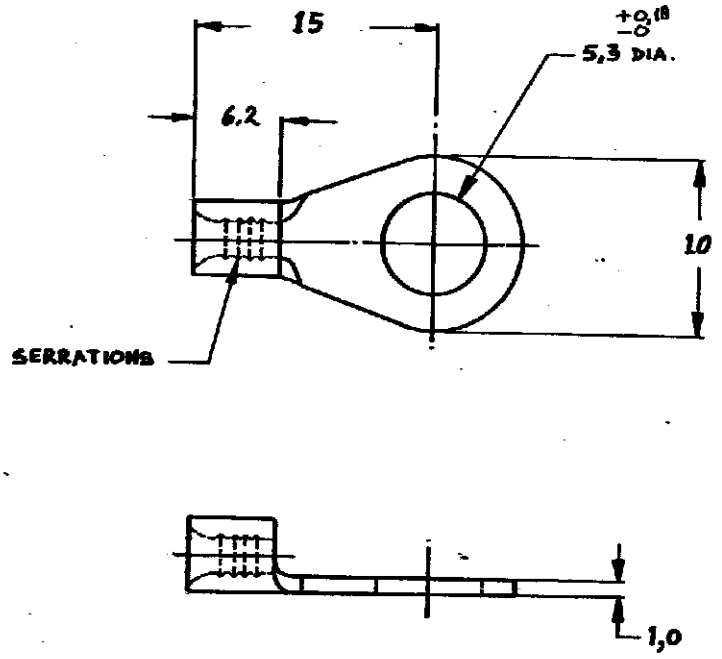

165302	COPPER	TIN PLATED
ORDER NO.	MATERIAL	PLATING

DR C. STERKEN DATE 11/6-1970 | DR DATE
CHK DATE | APP DATE 12/5-1972

DIMENSIONS IN M.M. DO NOT SCALE PRINT

CUSTOMER COPY FOR REFERENCE ONLY

©1970 BY AMP-HOLLAND N.V. ALL RIGHTS RESERVED A-MP PRODUCTS COVERED BY PATENTS AND/OR PATENTS PENDING.

AMP-HOLLAND N.V.
's-HERTOGENBOSCH
HOLLAND

WIRE-RANGE	INSUL-RANGE	TYPE
4-6 mm²	—	-DIN- SOLISTRAND.

SCALE	LOC	SIZE	NO	REV
N.T.S	H	A	C-165302-E	B

NAME RINGTONGUE stud: M5

AMP 12202