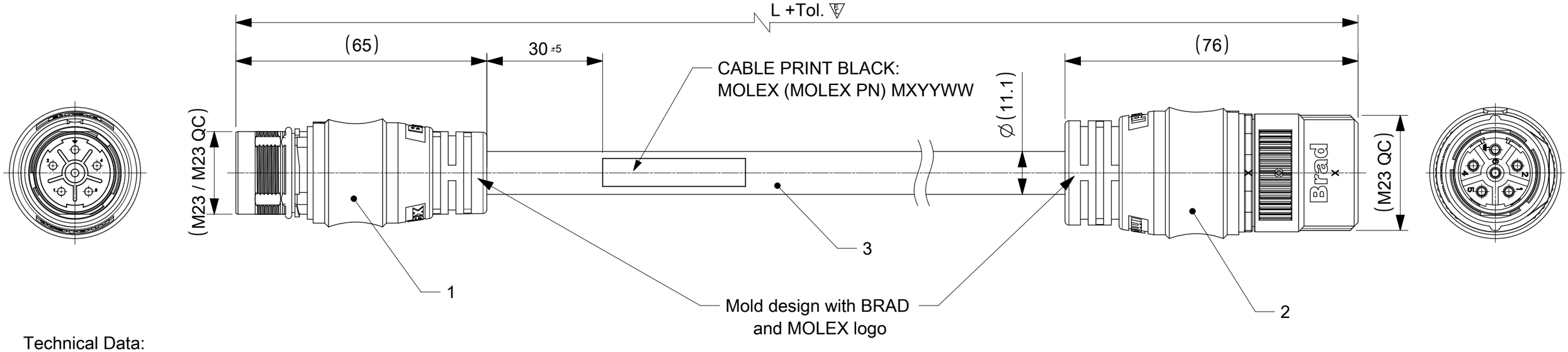

Technical Data:

Number of positions	5 + PE
Number of contacts	6
Contact ∅ [mm]	2
Nominal current [A]	18
Nominal voltage [V~] Degree of pollution 3	600
Test voltage [V~]	3000
Max. contact resistance [mΩ]	3
Insulation resistance [MΩ]	$>10^{13}$
Protection	IP67 (connected)
Temperature range (fixed)	-40°C to 90°C
Temperature range (flex)	-25°C to 80°C

Further details see Product Specification 1204800050

The cordsets delivered packed into carton without PE-bag

Connector pin assignment
Plug M23 5+PE MA

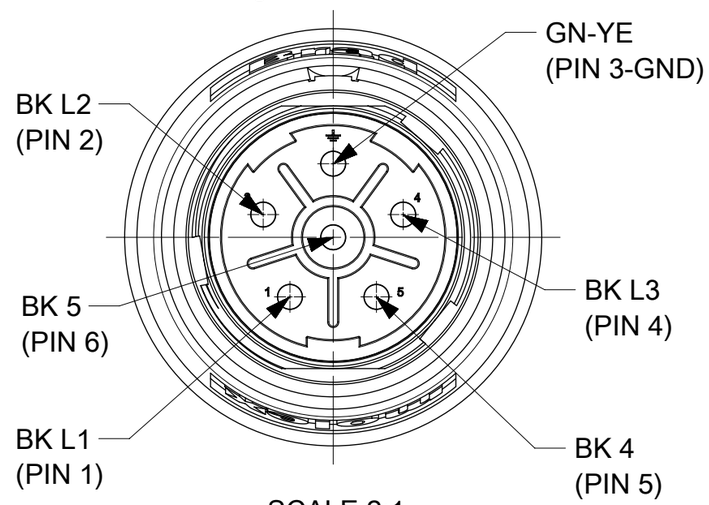

SCALE 2:1

Connector pin assignment
Plug M23 5+PE FE

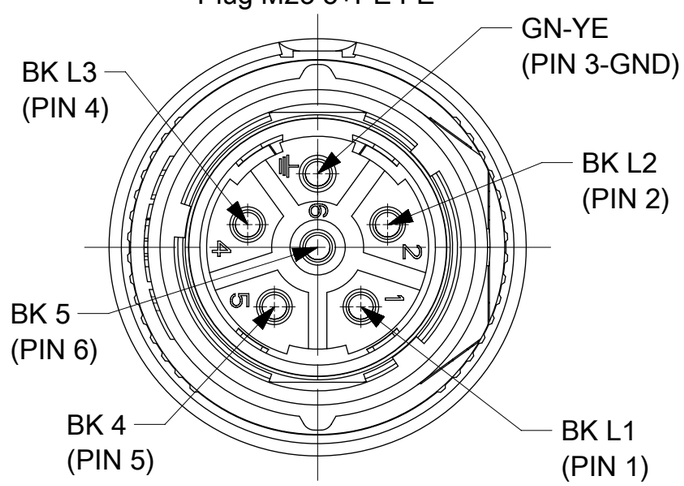

SCALE 2:1

TABLE 1

MOLEX PN	L [mm]	Tol. [mm]
1204800669	1000	+40
1204800670	2000	+60
1204800671	3000	+60
1204800672	4000	+60
1204800673	5000	+60
1204800674	10000	+80
1204800675	15000	+140
1204800676	20000	+140

Wiring Diagram
Connection: IN-LINE

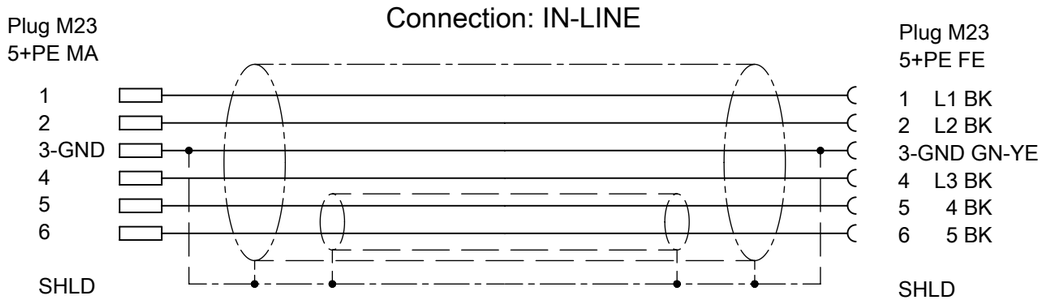

TABLE 2

POS	QTY	DESCRIPTION
1	1	PLG M23 5P_1PE PC MA STR SHLD
2	1	PLG M23QC 5P+PE PC FE STR SHLD
3	-	CABLE 4X1.5+(2X1.5) WSOR OR D11.1 SHLD

THIS DRAWING CONTAINS INFORMATION THAT IS PROPRIETARY TO MOLEX ELECTRONIC TECHNOLOGIES, LLC AND SHOULD NOT BE USED WITHOUT WRITTEN PERMISSION

SYMBOLS: E = 0; E = 1; E = 0; S = 0; ▼ = 0; C = 0; ☒ = 0; ■ = 0; V = 0

DIMENSION UNITS: mm
SCALE: 1:1
GENERAL TOLERANCES (UNLESS SPECIFIED)
ANGULAR TOL ± 1.0 °
4 PLACES ±
3 PLACES ±
2 PLACES ± 0.05
1 PLACE ± 0.3
0 PLACES ± 0.5
DRAFT WHERE APPLICABLE MUST REMAIN WITHIN DIMENSIONS

CURRENT REV DESC:
EC NO: 625960
DRWN: THAERDT 2019/10/21
CHK'D: RSILLER 2019/11/21
APPR: RSILLER 2019/11/21
INITIAL REVISION:
DRWN: MSCHERER 2018/06/29
APPR: RSILLER 2019/11/21

THIRD ANGLE PROJECTION
DRAWING: A3-SIZE
SERIES: 120480

molex

CSE M23 6P PC MA STR WSOR FE XM SHLD

PRODUCT CUSTOMER DRAWING

DOCUMENT NUMBER	DOC TYPE	DOC PART	REVISION
1204800669	PSD	000	A

MATERIAL NUMBER	CUSTOMER	SHEET NUMBER
SEE TABLE 1	GENERAL MARKET	1 OF 1

DOCUMENT STATUS	P1	RELEASE DATE	2019/11/21 07:37:42

FORMAT: master-sz-tg-A3
REVISION: H
DATE: 2018/01/18