| POL | MATERIAL NUMBER | ENGINEERING NUMBER | FINISHED LENGTH |
|---|---|---|---|
| 3 | 1200720130 | 703000A03F060 | 6.00' +3.50" -0 [1.8M +88.9 -0] |
| 4 | 1200720334 | 704000A03F060 | 6.00' +3.50" -0 [1.8M +88.9 -0] |
| 5 | 1200720459 | 705000A03F060 | 6.00' +3.50" -0 [1.8M +88.9 -0] |

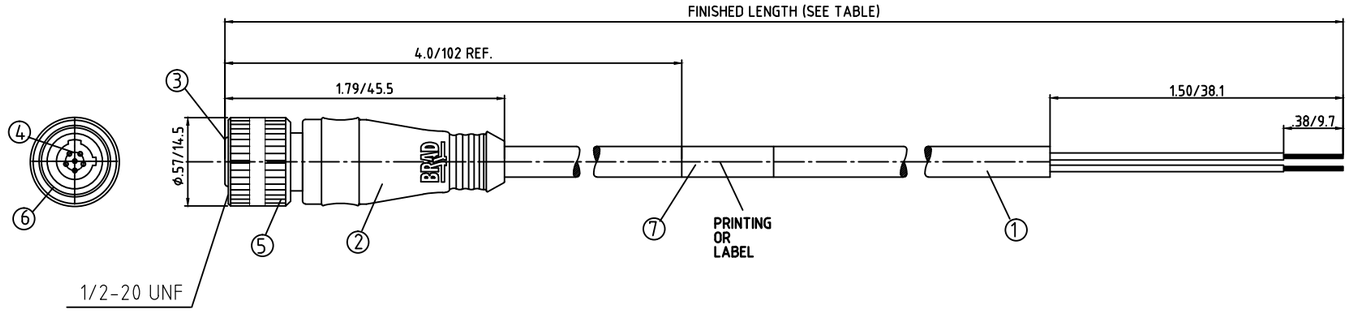


FRONT VIEW - FEMALE INSERT WIRING COLOR CODE

| 2 POLE | 3 POLE | 4 POLE | 5 POLE | 6 POLE |
|---|---|---|---|---|
| 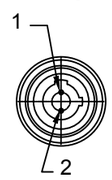 | 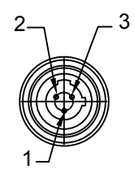 | 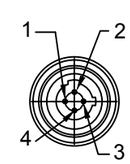 | 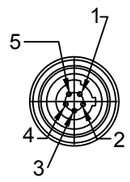 | 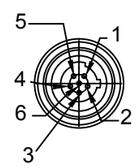 |
| 1- BROWN<br>2-BLUE | 1- GREEN<br>2-RED W/BLK. TR.<br>3. RED W/WHT. TR. | 1- RED W/BLK. TR.<br>2-RED W/WHT. TR.<br>3- RED<br>4- GREEN | 1- RED W/WHT. TR.<br>2- RED<br>3- GREEN (GND)<br>4- RED W/YEL. TR.<br>5- RED W/BLK. TR. | 1- RED/ W/EHT. TR.<br>2- RED<br>3- GREEN (GND)<br>4- RED W/YEL. TR.<br>5- RED W/BLK. TR.<br>6- RED W/BLUE TR. |

**CONNECTOR SPECIFICATION:**

| | |
|---|---|
| VOLTAGE RATING | 250 VAC/VDC |
| AMPERAGE RATING | max. 4 AMPS |
| PROTECTION | IP67 |
| OPERATING TEMPERATURE | -20°C TO 105°C |
| UL CERTIFICATIONS | UL LISTED, FILE NO. E152210 |
| CSA CERTIFICATIONS | CSA CERTIFIED,FILE NO. LR6837 |

| ITEM | COMPONENT | MATERIAL | FINISH |
|---|---|---|---|
| 7 | LABLE | MYLAR | BLACK/YELLOW |
| 6 | O-RING | NITRILE | RED |
| 5 | COUPLING NUT | ZINC DIE CAST/ BRASS | BLACK E-COATED/ NICKEL PLATED |
| 4 | CONTACT SOCKET | COPPER ALLOY | GOLD OVER NICKEL |
| 3 | INSERT | NYLON | BLACK |
| 2 | OVERMOLD | PVC | YELLOW |
| 1 | CABLE- 18 AWG (41x#34 COPPER STRANDING) 2-6 CONDUCTORS 300V | PVC | YELLOW |

REMOVED SPANISH
EC NO: IPG2015-1627
DRWN: GGUSTAFS 2015/03/16
CH'KD: BARDEN 2015/05/21
APPR: BWOODMAN 2010/03/09
DESCRIPTION
A
REV

QUALITY SYMBOLS
▼ = 0
(C) = 0

GENERAL TOLERANCES (UNLESS SPECIFIED)

| | mm | INCH |
|---|---|---|
| 4 PLACES | ±--- | ±--- |
| 3 PLACES | ±--- | ±--- |
| 2 PLACES | ±--- | ±.01 |
| 1 PLACE | ±0.3 | ±--- |
| ANGULAR ± | --- ° | |

DRAFT WHERE APPLICABLE MUST REMAIN WITHIN DIMENSIONS

DIMENSION STYLE: IN/MM
SCALE: 1:1
DESIGN UNITS: METRIC
THIRD ANGLE PROJECTION

DRAWN BY: LSTEMMLE DATE: 2010/02/05
CHECKED BY: FP DATE: 2010/03/09
APPROVED BY: FPACHER DATE: 2010/03/09

MICRO-CHANGE CORDSET
2-6P DUAL KEYWAY FE STR
#18/2-6 YELLOW PVC CABLE

molex MOLEX INCORPORATED

MATERIAL NO.: SEE CHART
DOCUMENT NO.: SD-120072-012
SHEET NO.: 1 OF 1
SIZE: A3

THIS DRAWING CONTAINS INFORMATION THAT IS PROPRIETARY TO MOLEX INCORPORATED AND SHOULD NOT BE USED WITHOUT WRITTEN PERMISSION