This drawing and all informations contained here can not be used or reproduced, integrally or partially, without written authorization by CS Srl.

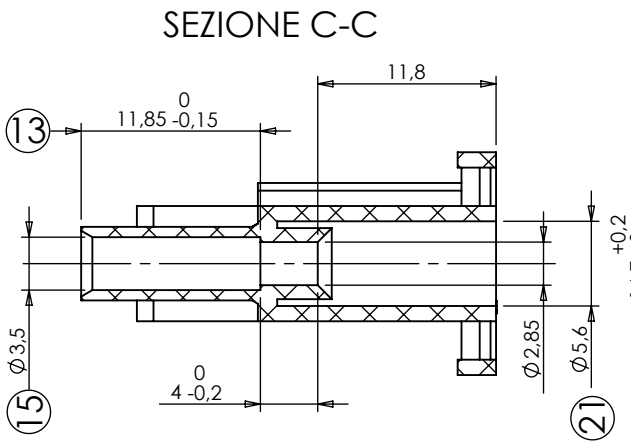

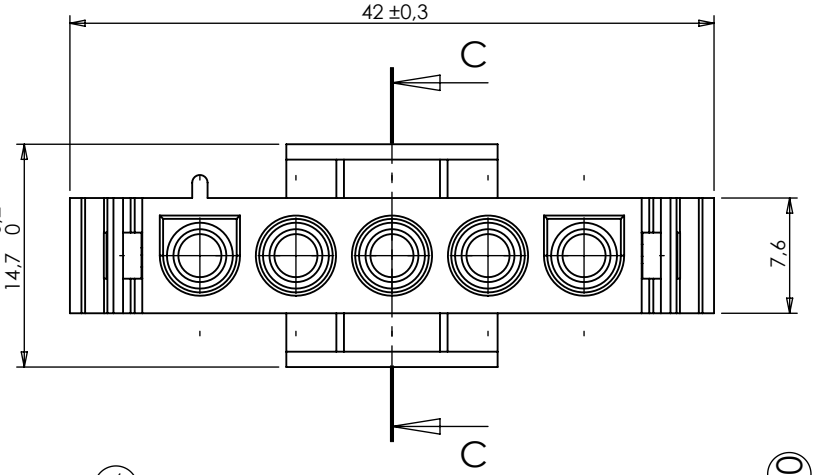

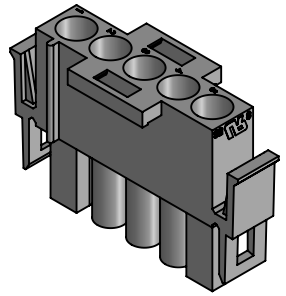

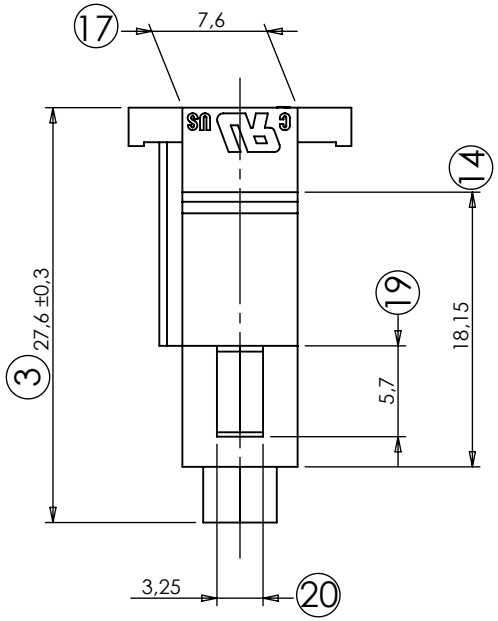

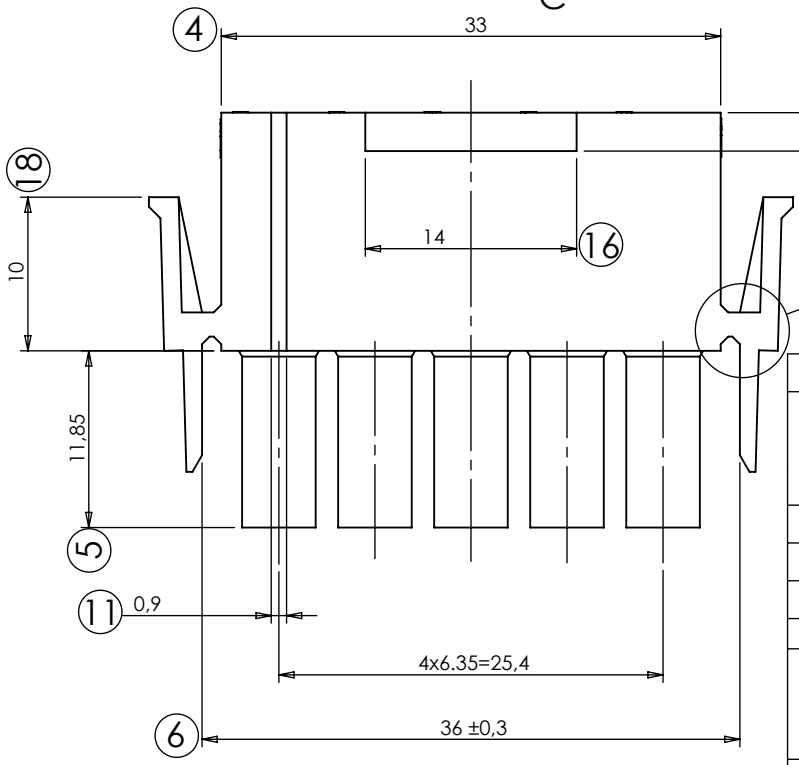

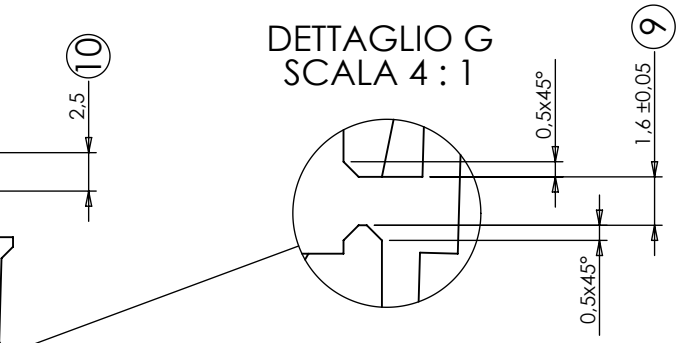

INDEX	MODIFICATION	DATE
5	Added new V0 NO FLAME thermoplastic	23-04-2018
4	Modified diameters from Ø3.75 to Ø3.50 mm (See section C-C) Improved thickness latching hook to 1.60 mm (See detail "G") Added chamfer 0.5x45° (Detail "G")	15-01-2016
3	Added UL & CSA symbols	09-11-2011
2	Updated raw materials table and title box	23-02-2011
1	Updated tolerance limits	02-12-1999

CS S.r.l.
20063 CERNUSCO S/N - VIA COMO, 11
TEL +39.02.9210.7404 - FAX +39.02.9210.0217
http://www.csconnectors.com - e-mail: info@csconnectors.com

CHECKED BY	DATE	DESIGN UNITS
Stefano Galimberti		METRIC
DRAWN BY	**DATE**	**WEIGHT**
Luca Viscardi		

CAD REFER	SIZE	SCALE	INDEX 0
Y:\dis\cs\lk\05vie\m\	A4	2:1	15-11-1997

BASE CODE	DESCRIPTION
CS-LK05M	5 poles plug housing for LK series terminals Ø2.12 mm

DIMENSIONS WITHOUT TOLERANCES		
	0 - 6	±0.1
∢ ±2°	6 - 30	±0.2
	> 30	±0.3

PART NUMBER	MATERIAL
CS-LK05M	PA66 UL94 V-2
CS-LK05MV0	PA6/66 UL94 V-0
CS-LK05MSTY	PA46 UL94 V-2
CS-LK05MV0750NF	PA66 UL94 V-0 GWIT 775
CS-LK05M-G	PA6 UL94 V-2 GWIT 775
CS-LK05MV0C4	PA66 UL94 V-0 GWIT 775