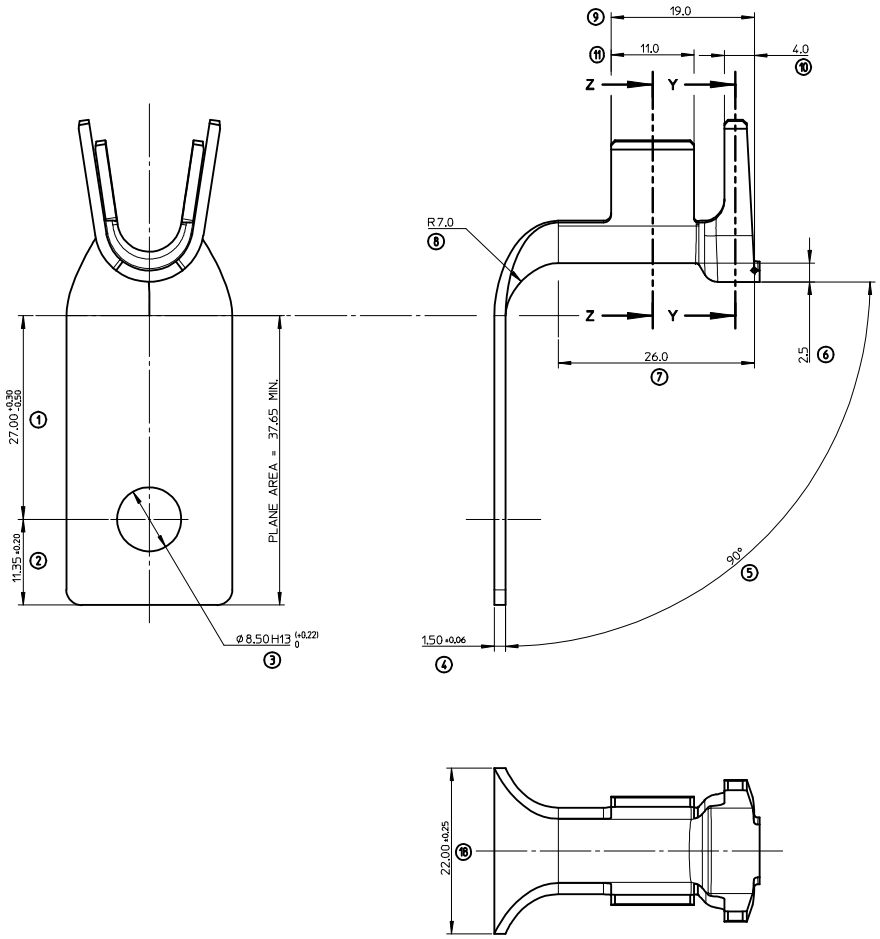

CRIMPING SECTIONS

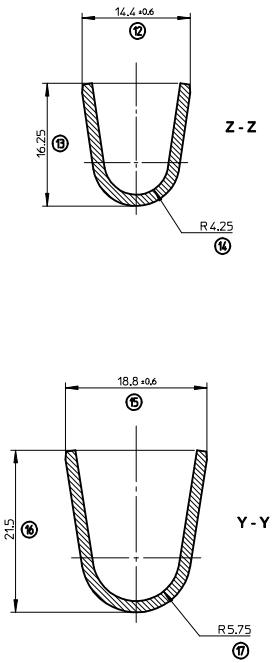

MODIFICATIONS

REV.	DESCRIPTIONS	NAME	DATE
01	DOCUMENT FIRST RELEASE	GD	2014/08/21

NOTES :

1 - MATERIAL : BRASS
2 - PLATING : POST-TIN PLATED
3 - CRIMPING RANGE (mm2) : 24,63 TO 40,46
4 - PACKAGING : PARTS DELIVERED ON LOOSE (600 PARTS PER CARDBOARD BOX)
5 - CRIMPING SPECIFICATION : AS-98863-001

REV.	FIRST	LAST	REMOVED	NEW
A	1	18		

INSPECTION NUMBERS

ISO VIEW

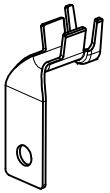

FIRST RELEASE
EC NO: G2015-0026
DRWN:GDESBRUERES 2014/08/21
CHKD:JDUCLOS 2014/08/21
APPR:OPLESSIS 2014/09/11
DESCRIPTION
REV A

QUALITY SYMBOLS

4 PLACES	±--- / ±---
3 PLACES	±--- / ±---
2 PLACES	±--- / ±---
1 PLACE	±0,3 / ±---
0 PLACE	±--- / ±---

GENERAL TOLERANCES (UNLESS SPECIFIED)
mm / INCH
ANGULAR ± 3 °
DRAFT WHERE APPLICABLE MUST REMAIN WITHIN DIMENSIONS

DIMENSION STYLE: MM ONLY
SCALE: 3:1
DESIGN UNITS: METRIC
FIRST ANGLE PROJECTION

DRAWN BY: GDESBRUERES DATE: 2014/08/21
CHECKED BY: JDUCLOS DATE: 2014/08/21
APPROVED BY: OPLESSIS DATE: 2014/09/11

TITLE: RING TERMINAL RA 8,5X22X1,5 24,63 - 40,46

molex

MATERIAL NO. 988631059
DOCUMENT NO. SD-98863-002
SHEET NO. 1 OF 1
SIZE A1

THIS DRAWING CONTAINS INFORMATION THAT IS PROPRIETARY TO MOLEX INCORPORATED AND SHOULD NOT BE USED WITHOUT WRITTEN PERMISSION

tb_frame_A1_P_AM_F
Rev. G 2012/01/11