PART NO.	ENG. NO.
02-06-1101	1561-(P901)
02-06-1103	1561-(P901)L
02-06-5101	1561-(P561)
02-06-5102	1561-(P561)L
02-06-5108	1561-(P228)
02-06-5109	1561-(P228)L
02-06-5100	1561-(P550)
02-06-5103	1561-(P550)L
02-06-5105	1561-(P591)
02-06-5104	1561-(P591)L
02-06-1118	1561-1(P901)
NOT TOOLED	1561-1(P901)L

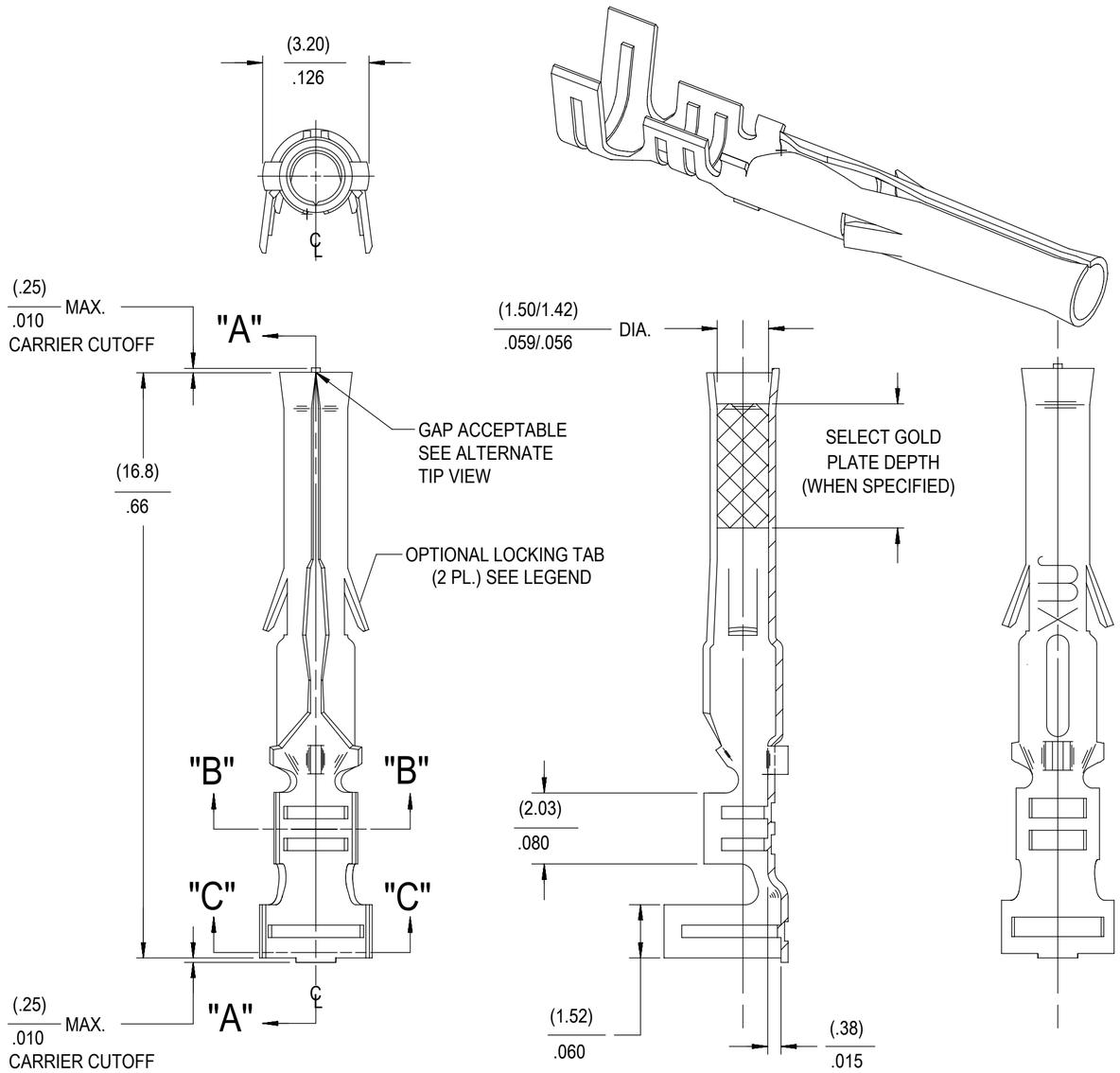

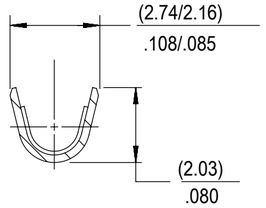

SECT. "B-B"

SCALE:10X

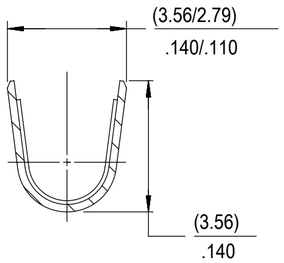

SECT. "C-C"

SCALE:10X

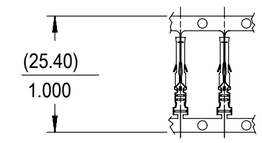

CARRIER VIEW
ACTUAL SIZE

SECT. "A-A"

LEGEND

1561-✳(✳✳✳✳)✳

- BLANK=WITH LOCKING TABS
- 1=WITHOUT LOCKING TABS
- P=PREPLATE
- BLANK=POSTPLATE
- FINISH CODE
- FORM
  - BLANK=CHAIN
  - L=LOOSE

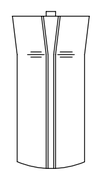

ALTERNATE TIP GEOMETRY
SEE NOTE 7

NOTES:
1. MATERIAL: BRASS
2. FINISH:
   901 HOT TIN DIP (.00051)/.000020 MIN.
   228 SELECT GOLD PLATE (.00075)/.000030 MIN. IN CONTACT AREA, SELECT TIN. (.00250)/.000100 MIN. IN CRIMP AREA OVER (.00125)/.000050 MIN. NICKEL OVERALL.
   561 SELECT GOLD PLATE (.00076)/.000030 MIN. IN CONTACT AREA, OVER (.00127)/.000050 MIN. NICKEL OVERALL.
   591 SELECT GOLD PLATE (.00175)/.000050 MIN. IN CONTACT AREA, OVER (.00127)/.000050 MIN. NICKEL OVERALL WITH (.000025)/.000010 MAX. GOLD FLASH OVERALL.
   550 SELECT GOLD PLATE (.00038)/.000015 MIN. IN CONTACT AREA, OVER (.00076)/.000030 MIN. NICKEL OVERALL WITH (.000025)/.000010 MAX. GOLD FLASH OVERALL.
3. PRODUCT SPECIFICATION: PS-02-06.
4. PACKAGING INFORMATION:
   LOOSE TERMINALS: PK-1190-003
   CHAIN TERMINALS: 15610000-PK
5. TERMINAL FOR USE WITH (1.57)/.062 DIA. SERIES HOUSINGS AND WILL ACCEPT 18 THRU 24 AWG WIRE WITH (1.52/3.05)/.060/.120 INSULATION DIA.
6. PARTS CONFORM TO CLASS B REQUIREMENTS OF COSMETIC SPECIFICATION PS-45499-002.
7. TIP GEOMETRY IS TOOL DEPENDENT. EITHER GEOMETRY IS ACCEPTABLE.

DOCUMENT STATUS	P1	RELEASE DATE	2019/05/10 19:11:19

SYMBOLS: EA = 0; EC = 0; EP = 0; S = 0; ▼ = 0; C = 0; ☒ = 0; ■ = 0; G = 0

THIS DRAWING CONTAINS INFORMATION THAT IS PROPRIETARY TO MOLEX ELECTRONIC TECHNOLOGIES, LLC AND SHOULD NOT BE USED WITHOUT WRITTEN PERMISSION

DIMENSION UNITS: MM/IN
SCALE: NTS

GENERAL TOLERANCES (UNLESS SPECIFIED)

	MM	INCH
4 PLACES	±	±
3 PLACES	±	± 0.01
2 PLACES	± 0.25	± 0.014
1 PLACE	± 0.36	±
0 PLACES	±	±
ANGULAR TOL	± 0.5 °	

DRAFT WHERE APPLICABLE MUST REMAIN WITHIN DIMENSIONS

CURRENT REV DESC: UPDATE PK SPEC

EC NO: 614240
DRWN: JEHRISMAN 2019/03/22
CHK'D: FSMITH 2019/05/10
APPR: FSMITH 2019/05/10

INITIAL REVISION:
DRWN: GEW 1991/02/19
APPR: GWF 1991/02/19

THIRD ANGLE PROJECTION | DRAWING: C-SIZE | SERIES: 1561

molex

CRIMP TERMINAL, FEMALE
.062 DIA. FOR 18-24 AWG WIRE

PRODUCT CUSTOMER DRAWING

DOCUMENT NUMBER	DOC TYPE	DOC PART	REVISION
SD-1561-X	PSD	001	AP3

MATERIAL NUMBER	CUSTOMER	SHEET NUMBER
SEE TABLE	GENERAL MARKET	1 OF 1

FORMAT: Eng-tega-master-tb-prod-C
REVISION: D
DATE: 2018/01/18