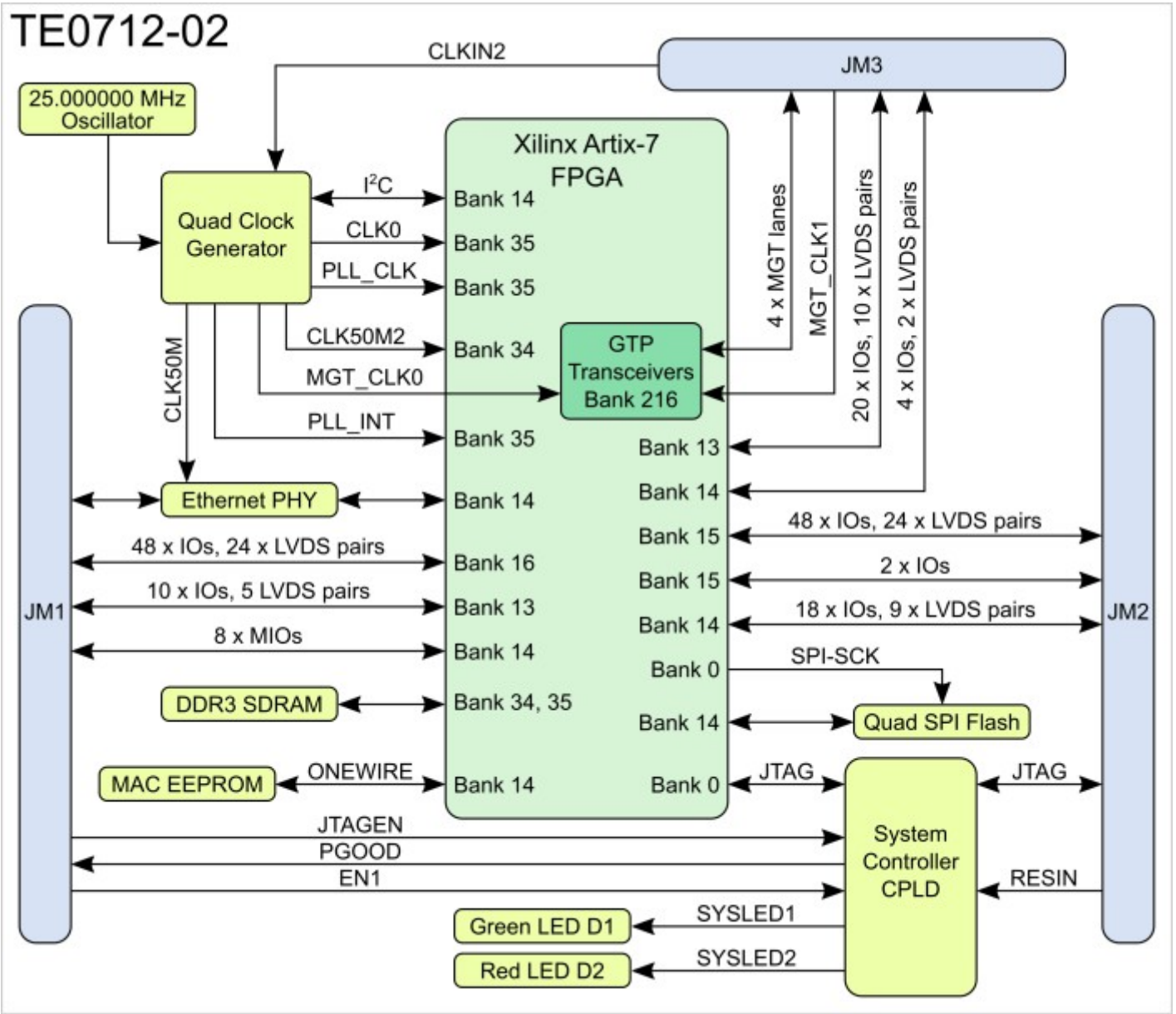
TE0712-02
CLKIN2
JM3
25.000000 MHz Oscillator
Xilinx Artix-7 FPGA
Quad Clock Generator
I²C
CLK0
PLL_CLK
CLK50M2
MGT_CLK0
PLL_INT
CLK50M
Bank 14
Bank 35
Bank 35
Bank 34
Bank 35
Bank 14
Bank 16
Bank 13
Bank 14
Bank 34, 35
Bank 14
GTP Transceivers Bank 216
4 x MGT lanes
MGT_CLK1
20 x IOs, 10 x LVDS pairs
4 x IOs, 2 x LVDS pairs
Bank 13
Bank 14
Bank 15
Bank 15
Bank 14
Bank 0
Bank 14
Bank 0
JM1
JM2
Ethernet PHY
48 x IOs, 24 x LVDS pairs
10 x IOs, 5 LVDS pairs
8 x MIOs
DDR3 SDRAM
MAC EEPROM
ONEWIRE
48 x IOs, 24 x LVDS pairs
2 x IOs
18 x IOs, 9 x LVDS pairs
SPI-SCK
Quad SPI Flash
JTAG
JTAG
JTAGEN
PGOOD
EN1
System Controller CPLD
RESIN
SYSLED1
SYSLED2
Green LED D1
Red LED D2