TOLERANCE UNLESS OTHERWISE SPECIFIED	
.X	±---
.XX	±---
.XXX	±.005

THIS IS A C.A.D. GENERATED DRAWING
DO NOT MAKE MANUAL REVISIONS TO MASTER.

ISSUE NUMBER	
ORIGINAL	1
CONVERTED TO SW2020 C.B AUG, 20/2020	2

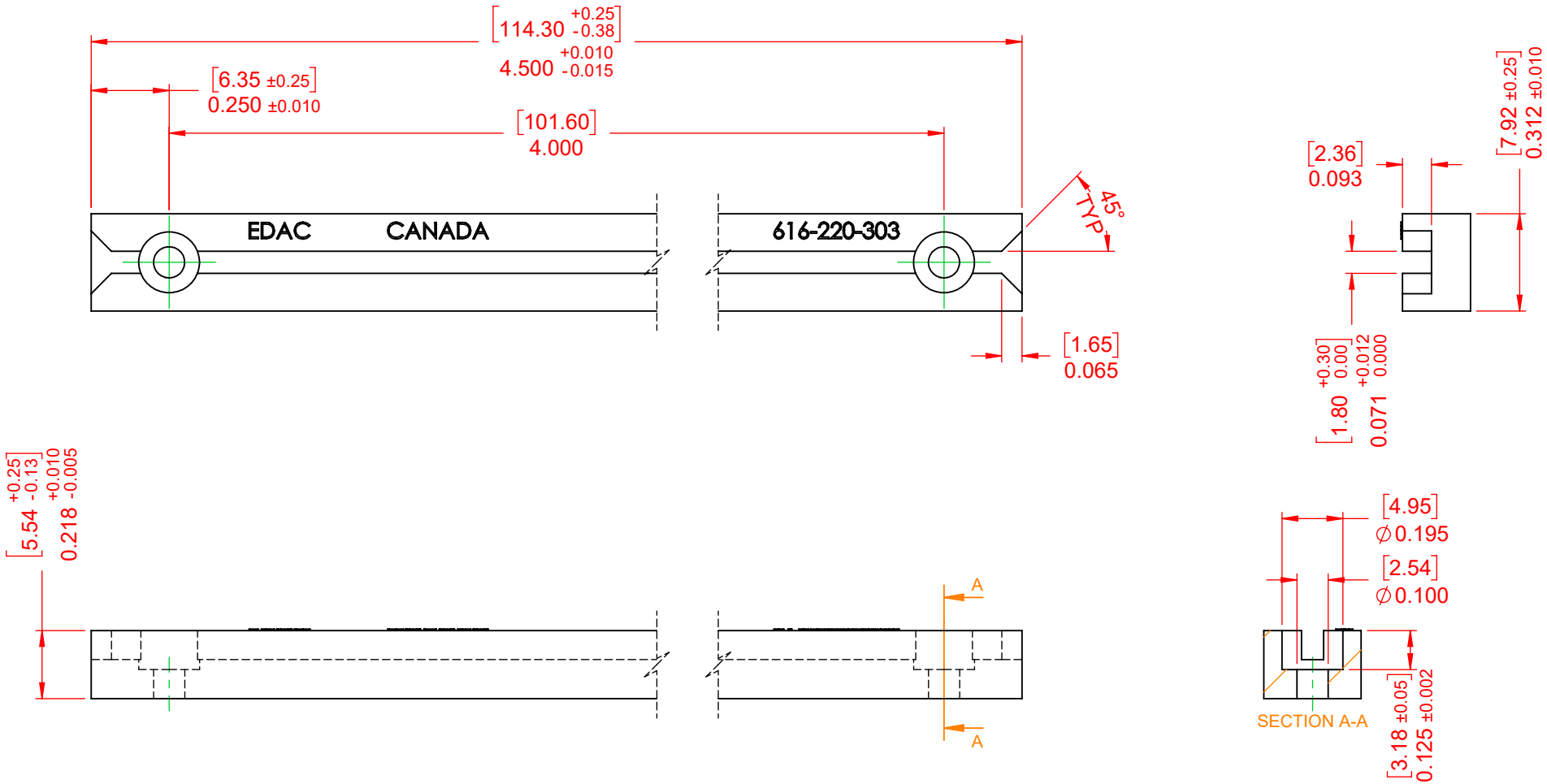

NOTE:
MATERIAL & FINISH: THERMOPLASTIC POLYESTER, UL94V-0 RATED, GREY IN COLOR

THIS SERIES FULLY CONFORMS TO THE EUROPEAN UNION DIRECTIVES 2011/65/EU FOR RoHS COMPLIANCY.

RoHS COMPLIANT

616 SERIES UNI-GUIDE	ACAD REFERENCE NO.: 616-220-001	
	DRAWN: F. BIRONES	DATE: APR, 17/1997
	CHECKED:	DATE:
EDAC INC TORONTO, ONTARIO CANADA — YOUR CONNECTION TO QUALITY & SERVICE	SCALE: 2:1	SHEET 1 OF 1
	DRAWING NUMBER: 616-220-001	ISSUE 23
	PART NUMBER: 616-220-303	

THESE DRAWINGS AND SPECIFICATIONS ARE THE PROPERTY OF EDAC INC.,AND SHALL NOT BE REPRODUCED,OR COPIED OR USED AS THE BASIS FOR THE MANUFACTURE OR SALE OF APPARATUS WITHOUT WRITTEN PERMISSION.