Mounting Option
.156 (3.96) Dia. Mounting Holes

Contact Detail
Wire Hole .087x.013(2.21x0.33) - Tail LG .282(7.16)
.156 [3.96] Contact Spacing x .200 [5.08] Row Spacing

THIS IS A C.A.D. GENERATED DRAWING
DO NOT MAKE MANUAL REVISIONS TO MASTER

ISSUE NUMBER
ORIGINAL 1

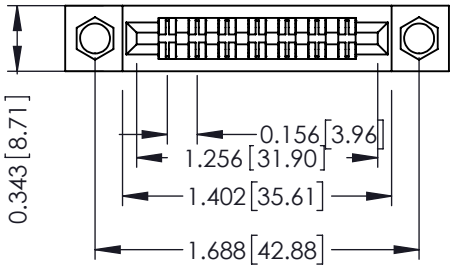

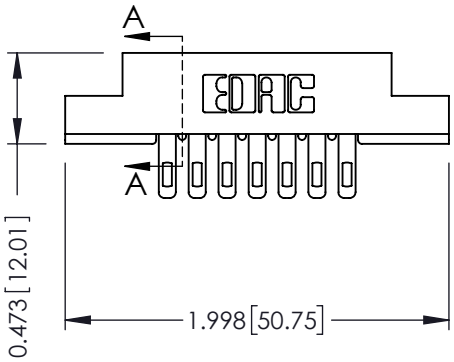

SECTION A-A

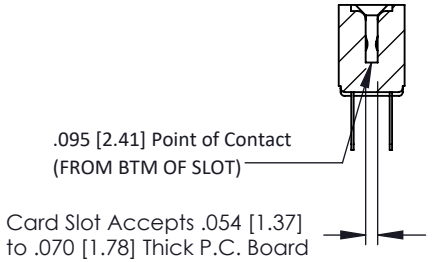

See Accompanying Pages for:
- **Contact Bend Details**
- **Mounting Options**

307 / 357 Card Edge Connector
Part Number: 307-014-400-204

EDAC INC
TORONTO, ONTARIO
CANADA
YOUR CONNECTION TO QUALITY & SERVICE

THESE DRAWINGS AND SPECIFICATIONS ARE THE PROPERTY OF EDAC INC.,AND SHALL NOT BE REPRODUCED,OR COPIED OR USED AS THE BASIS FOR THE MANUFACTURE OR SALE OF APPARATUS WITHOUT WRITTEN PERMISSION.

ACAD REFERENCE NO.	307 ENG MASTER
DRAWN: J.LEE	DATE: AUG. 11/09
CHECKED:	DATE:
SCALE: NTS	SHEET 1 OF 3
DRAWING NUMBER: 307 Assembly	ISSUE: 1

THIS IS A C.A.D. GENERATED DRAWING
DO NOT MAKE MANUAL REVISIONS TO MASTER

ISSUE NUMBER
ORIGINAL 1

Single Row Contacts - Read One Side of Daughter Board

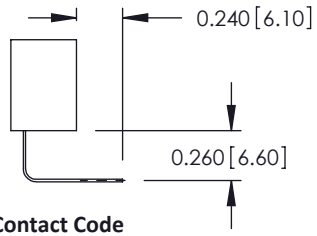

558 Contact Code

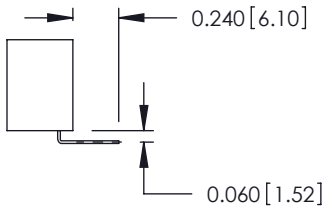

559 Contact Code

Single Row Contacts - Read Both Sides of Daughter Board

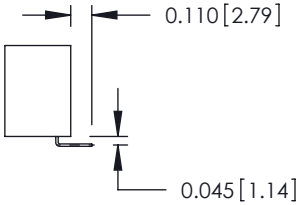

553 Contact Code

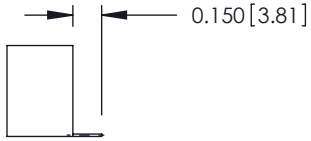

554 Contact Code

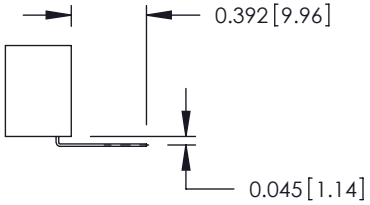

557 Contact Code

Dual Row Contacts - Read Both Sides of Daughter Board

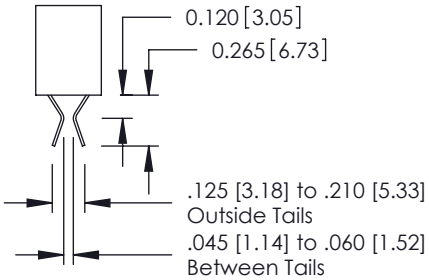

555 Contact Code

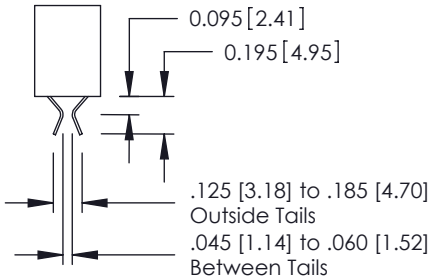

556 Contact Code

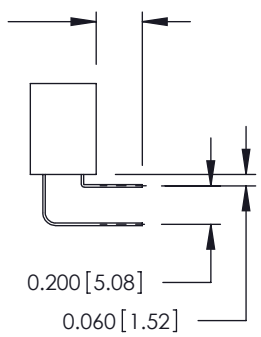

558 Contact Code

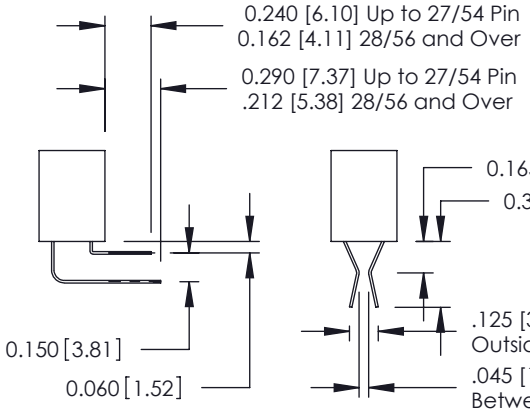

559 Contact Code

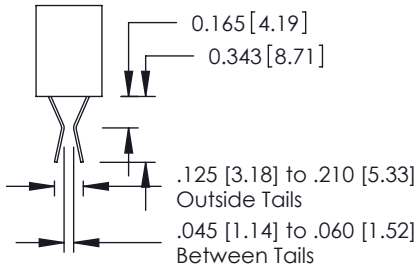

560 Contact Code

307/ 357 Series Card Edge Connector Contact Bend Detail	ACAD REFERENCE NO. 307 ENG MASTER	
	DRAWN: J.LEE	DATE: AUG. 11/09
	CHECKED:	DATE:
EDAC INC TORONTO, ONTARIO CANADA YOUR CONNECTION TO QUALITY & SERVICE	SCALE: NTS	SHEET 2 OF 3
THESE DRAWINGS AND SPECIFICATIONS ARE THE PROPERTY OF EDAC INC.,AND SHALL NOT BE REPRODUCED,OR COPIED OR USED AS THE BASIS FOR THE MANUFACTURE OR SALE OF APPARATUS WITHOUT WRITTEN PERMISSION.	DRAWING NUMBER 307 Assembly	ISSUE 1

THIS IS A C.A.D. GENERATED DRAWING
DO NOT MAKE MANUAL REVISIONS TO MASTER

ISSUE NUMBER
ORIGINAL 1

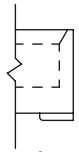

Code x01

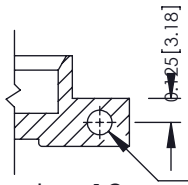

Code x12

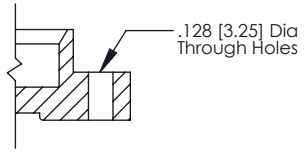

Code x02

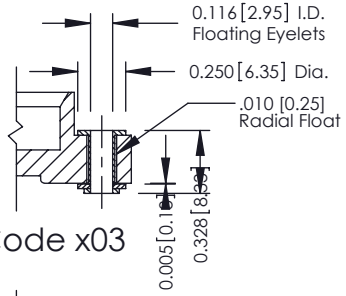

Code x03

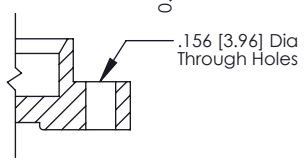

Code x04

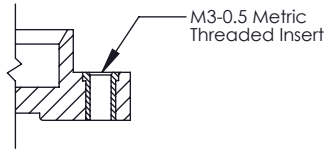

Code x07

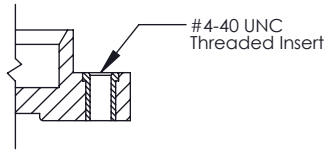

Code x08

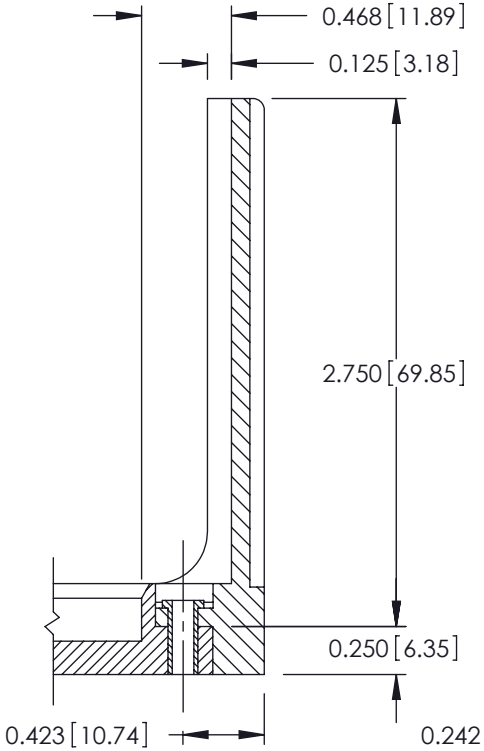

Code x58

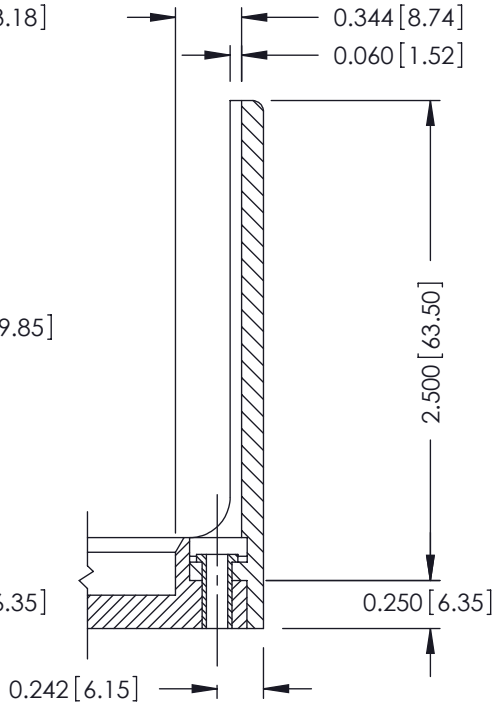

Code x68

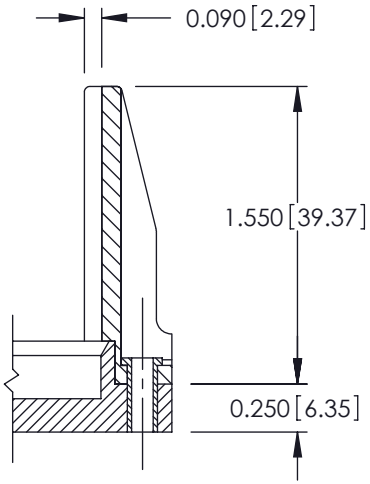

Code x78

307 / 357 Card Edge Connector Mounting Options

EDAC INC
TORONTO, ONTARIO
CANADA
YOUR CONNECTION TO QUALITY & SERVICE

THESE DRAWINGS AND SPECIFICATIONS ARE THE PROPERTY OF EDAC INC., AND SHALL NOT BE REPRODUCED, OR COPIED OR USED AS THE BASIS FOR THE MANUFACTURE OR SALE OF APPARATUS WITHOUT WRITTEN PERMISSION.

ACAD REFERENCE NO.	307 ENG MASTER	
DRAWN: J.LEE	DATE: AUG. 11/09	
CHECKED:	DATE:	
SCALE: NTS	SHEET 3 OF 3	
DRAWING NUMBER 307 Assembly	ISSUE 1	