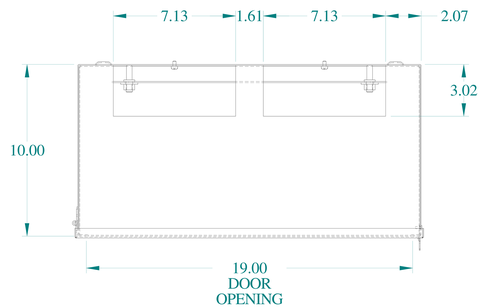

TOP VIEW

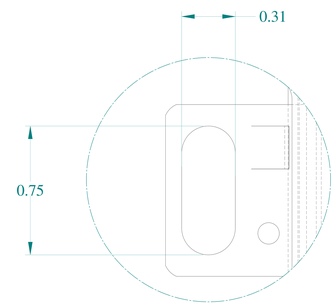

DETAIL Z
TYP

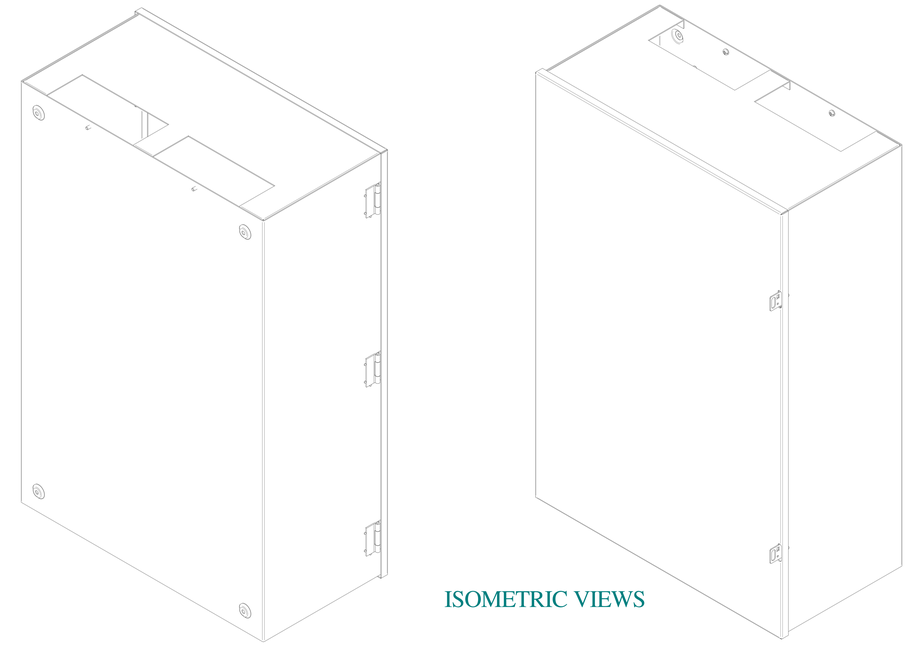

ISOMETRIC VIEWS

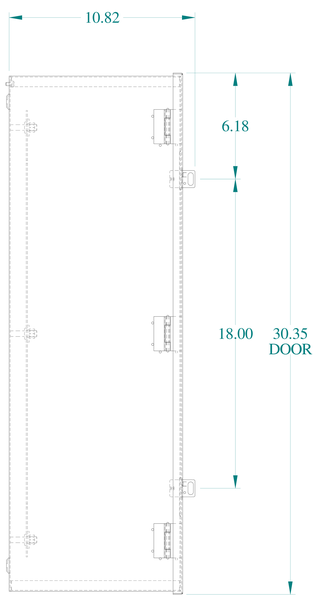

SIDE VIEW

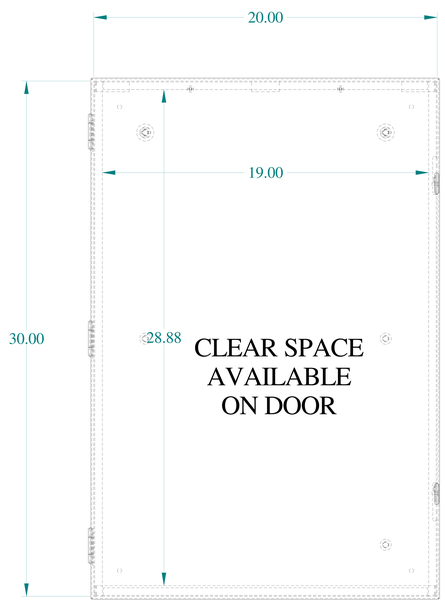

FRONT VIEW

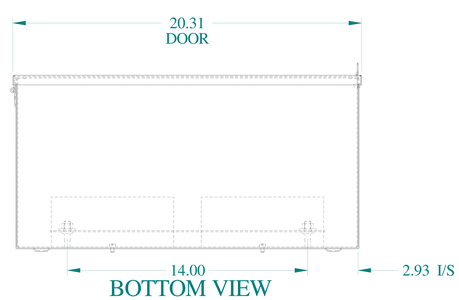

BOTTOM VIEW

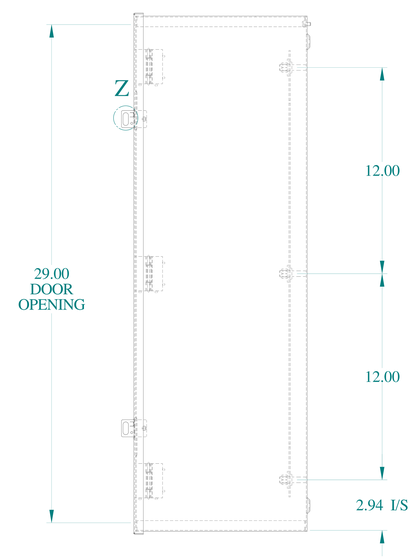

SIDE VIEW

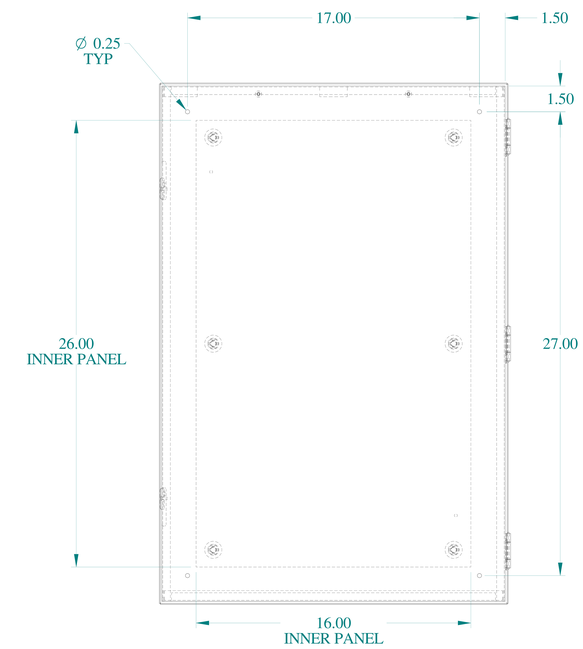

SIDE VIEW

HAMMOND MANUFACTURING®

www.hammondmfg.com

Data subject to change without notice.

Part # : CMC302010	Date : Mar. 23, 2019

Link:www.hammfg.com/CMC302010