Technical Data Sheet		Rosenberger
N 50 Ω	Adaptor N Plug – 4.3-10 Jack	**53S164-K00N1**

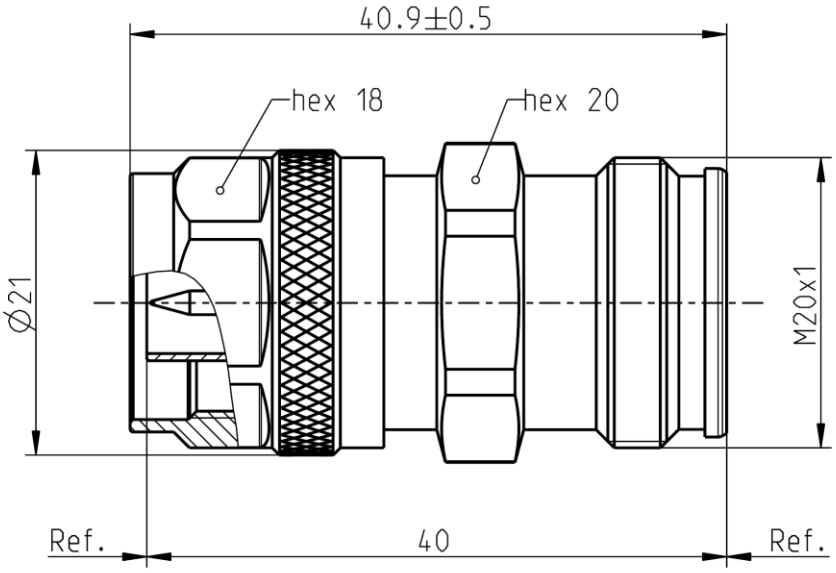

All dimensions are in mm; tolerances according to ISO 2768 m-H

Interface

According to	4.3-10 side:	IEC 61169-54
	N side:	IEC 61169-16, MIL-PRF-39012, CECC 22210

Documents

N/A

Material and plating

Connector parts		**Material**	**Plating**
Center contact	4.3-10 side:	CuBe	Silver, 3-6 µm
Center contact	N side:	Brass	Silver, 3-6 µm
Outer contact		Brass	Flash white bronze over silver(e.g. Optargen®)
Body		Brass	Flash white bronze over silver(e.g. Optargen®)
Dielectric		PTFE	
Gasket		Silicone	

Dieses Dokument ist urheberrechtlich geschützt ● This document is protected by copyright ● Rosenberger Hochfrequenztechnik GmbH & Co. KG

Rosenberger Hochfrequenztechnik GmbH & Co. KG
P.O.Box 1260 D-84526 Tittmoning Germany
www.rosenberger.com

Tel. : +49 8684 18-0
Email : info@rosenberger.com

öffentlich | public

Electrical data

Impedance	50 Ω	
Frequency	DC to 12 GHz	
Return loss	≥ 36 dB @ DC to 4 GHz ≥ 32 dB @ 4 GHz to 6 GHz	
Insertion loss	≤ 0.05 x $\sqrt{f\,[GHz]}$ dB	
Insulation resistance	≥ 5 GΩ	
Center contact resistance	≤ 1.0 mΩ, 4.3-10 side	≤ 1.0 mΩ, N side
Outer contact resistance	≤ 1.0 mΩ, 4.3-10 side	≤ 0.25 mΩ, N side
Test voltage	2500 V rms	
Working voltage	500 V rms	
RF-leakage	≥ 128 dB @ DC to 1 GHz	
Power handling (at 20 °C, sea level, VSWR 1.0)	1000 W @ 1 GHz 700 W @ 2 GHz	
Intermodulation (3rd order)	≥ 168 dBc (2 x 43 dBm)	

- RL values only valid for the interface -

Mechanical data

	4.3-10 side	N side
Mating cycles	≥ 100	min. 500
Center contact captivation: axial	≥ 30 N	≥ 28 N
radial	> 5 Ncm	≥ 3 Ncm
Recommended torque	5 Nm	0.7 to 1.1 Nm
Center contact retention force	1.5 N – 20 N	
Engagement force	typ. 100 N	N/A
Disengagement force	typ. 80 N	N/A

Environmental data

Temperature range	-55 °C to +90 °C operating temperature
Thermal shock	IEC 60169-1, Sub-clause 16.4
Corrosion resistance	ISO 21207 method B
Vibration	IEC 61169-1 9.3.3 and IEC 60068-2-64
Shock	IEC 61169-1 9.3.14
Degree of protection (mated pair)	IEC 60529, IP68 1h / 25m
RoHS	compliant

Tooling

N/A

Suitable cables

N/A

Weight

Weight	51.2 g/pce

While the information has been carefully compiled to the best of our knowledge, nothing is intended as representation or warranty on our part and no statement herein shall be construed as recommendation to infringe existing patents. In the effort to improve our products, we reserve the right to make changes judged to be necessary.

For the installation of the electrotechnical equipment, particular electrotechnical expertise is required.

Draft	Date	Approved	Date
F. Fraunhofer	26.07.13	F. Fraunhofer	07.03.22

Rev.	Engineering change number	Name	Date
c00	22-0461	S. Huber-Siegl	07.03.22

Rosenberger Hochfrequenztechnik GmbH & Co. KG
P.O.Box 1260 D-84526 Tittmoning Germany
www.rosenberger.com

Tel. : +49 8684 18-0
Email : info@rosenberger.com

Dieses Dokument ist urheberrechtlich geschützt ● This document is protected by copyright ● Rosenberger Hochfrequenztechnik GmbH & Co. KG

RFB0035/12.20/6.4

öffentlich | public