THIS DRAWING IS UNPUBLISHED. RELEASED FOR PUBLICATION 20
© COPYRIGHT 20 BY TYCO ELECTRONICS CORPORATION. ALL RIGHTS RESERVED.

| PART NUMBER | REV | TERMINATOR | FEED TYPE | DESCRIPTION |
|---|---|---|---|---|
| 1529273-1 | A | BENCH & LEADMAKER | MECH POST FEED | HDI APPLICATOR |
| 7-1529273-1 | A | BENCH & LEADMAKER | MECH POST FEED | -1 AND SPARE PARTS |
| 7-1529273-7 | A | - | - | SPARE PARTS KIT |

SET UP GAGE 458638-3

| LOC | DIST |
|---|---|
| A | 66 |

REVISIONS

| P | LTR | DESCRIPTION | DATE | DWN | APVD |
|---|---|---|---|---|---|
| | A | ECO-08-009685 | 30MAY2008 | MB | MC |

| CRIMP DATA | TE TERMINAL | TE CRIMP SPECS |
|---|---|---|

TERMINAL NAME: -

| CRIMP | SIZE | TYPE | RANGE |
|---|---|---|---|
| WIRE | 2.79 [.110 IN] | F | 1.00-2.50mm² or 16-14 AWG |
| INSUL | 4.57 [.180 IN] | OV/5 | 1.90-3.60 [.075-.142 IN] /6 |

WIRE STRIP LENGTH 4.80-5.60 [.189-.220 IN]

APPL INSTRUCTIONS 408-8323 & 408-8490

TERMINAL APPL SPEC 114-3118 - - - -

FEED 21.46 [.845 IN]

TERMINALS APPLIED

| | | | |
|---|---|---|---|
| 160446 | - | - | - |
| 160824 | - | - | - |
| - | - | - | - |
| - | - | - | - |
| - | - | - | - |

| WIRE SIZE | CRIMP HEIGHT * | REF SETTING * |
|---|---|---|
| 2.50mm² | 1.83 ±0.05 [.072 ±.002 IN] | C4 |
| 2.00mm² or 14AWG | 1.78 ±0.05 [.070 ±.002 IN] | C8 |
| 1.50mm² or 16AWG | 1.68 ±0.05 [.066 ±.002 IN] | D4 |
| 1.00mm² | 1.58 ±0.05 [.062 ±.002 IN] | E2 |
| - | - | - |
| - | - | - |
| - | - | - |
| - | - | - |
| - | - | - |
| - | - | - |
| - | - | - |
| - | - | - |
| - | - | - |

1. RECOMMENDED SPARE PARTS
2. GREASE RAM, CAM, CAM FOLLOWER AND FEED ROD LIGHTLY.
3. CERTAIN TERMINALS REQUIRE LUBRICATION. REFER TO THE APPLICATOR INSTRUCTION SHEET FOR MORE INFORMATION.
4. LUBRICATE DAILY PER THE APPLICATOR INSTRUCTION SHEET SUPPLIED WITH THE APPLICATOR.
5. INS CRIMP FORM AS PER ORIGINAL CUSTOMER REQUEST.
6. THIS APPLICATOR HAS BEEN DESIGNED TO APPLY FLRY TYPE INSULATION. INSULATION RANGE SHOWN IS THAT OF THE APPLICATOR.

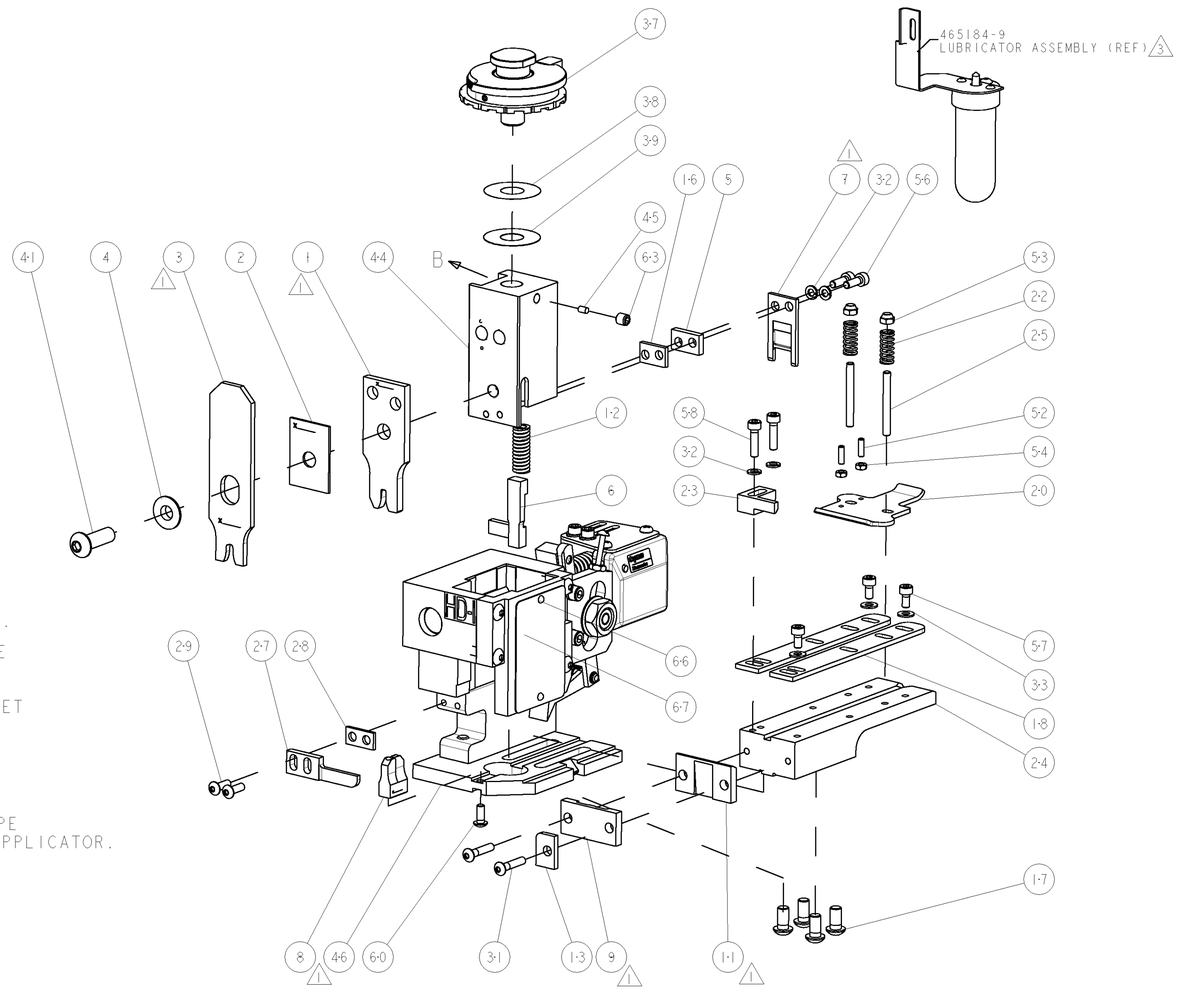


| | | | | | | ITEM NO |
|---|---|---|---|---|---|---|
| | - | 1 | 1 | 1338705-4 | DOCUMENTATION PACKAGE | 71 |
| | - | 1 | 1 | 461264-5 | PLATE, IDENTIFICATION | 67 |
| | - | 2 | 2 | 21017-2 | SCREW, DRIVE | 66 |
| | - | 1 | 1 | 3-18031-0 | SCR, SET, CUP POINT M6 X 6.0 | 63 |
| | - | 1 | 1 | 18024-7 | SCR, BTN SKT HD CAP (M4 X 10.0) | 60 |
| | - | 2 | 2 | 1-18023-3 | SCR, SKT HD CAP M4 X 16.0 | 58 |
| | - | 3 | 3 | 1-18023-0 | SCR, SKT HD CAP M4 X 8.0 | 57 |
| | - | 2 | 2 | 1-18023-2 | SCR, SKT HD CAP M4 X 12.0 | 56 |
| | - | 2 | 2 | 18029-1 | NUT, HEX, REG M3 | 54 |
| | - | 2 | 2 | 986965-1 | NUT, LOCK, HEX, TORQUE (M4) | 53 |
| | - | 2 | 2 | 2-18032-2 | SCR, SET, FLT POINT M3 X 10.0 | 52 |
| | - | 1 | 1 | 18024-3 | SCR, BTN SKT HD CAP (M3 X 10.0) | 49 |
| | - | 1 | 1 | 1338676-1 | CAM, UNIVERSAL POST-FEED | 47 |
| | - | 1 | 1 | 1338662-2 | SUB ASSY, APPLICATOR FRAME | 46 |
| | - | 1 | 1 | 690191-1 | PLUG,NYLON | 45 |
| | - | 1 | 1 | 1320998-1 | RAM | 44 |
| | - | 1 | 1 | 2-18024-6 | SCR, BTN SKT HD CAP (M8 X 25.0) | 41 |
| | - | 1 | 1 | 690125-1 | SHIM SUB-ASSY | 39 |
| | - | 1 | 1 | 469367-4 | SHIM | 38 |
| | - | 1 | 1 | 879103-2 | FINE ADJUST HEAD ASSEMBLY | 37 |
| | - | 3 | 3 | 18027-2 | WASHER, FLAT, REG M4 | 33 |
| | - | 4 | 4 | 18025-2 | WASHER, SPRG LOCK, REG M4 | 32 |
| | - | 2 | 2 | 1-18024-0 | SCR, BTN SKT HD CAP (M4 X 20.0) | 31 |
| | - | 2 | 2 | 18024-8 | SCR, BTN SKT HD CAP (M4 X 12.0) | 29 |
| | - | 1 | 1 | 3-690451-2 | SPACER, STRIPPER | 28 |
| | - | 1 | 1 | 240639-1 | STRIPPER (MACHINING) | 27 |
| | - | 2 | 2 | 1320906-1 | STUD, THREADED | 25 |
| | - | 1 | 1 | 1320995-6 | PLATE, STRIP GUIDE | 24 |
| | - | 1 | 1 | 240825-2 | PLATE, STRIP HOLD DOWN | 23 |
| | - | 2 | 2 | 4-22281-1 | SPRING, DRAG | 22 |
| | - | 1 | 1 | 1338665-1 | DRAG | 20 |
| | - | 2 | 2 | 1338663-5 | GUIDE, LOWER STRIP | 18 |
| | - | 4 | 4 | 1-18024-8 | SCR, BTN SKT HD CAP (M6 X 12.0) | 17 |
| | - | 1 | 1 | 1338708-1 | SPACER, SLUG BLADE | 16 |
| | - | 1 | 1 | 690481-9 | SPACER, HOLD DOWN | 13 |
| 1 | - | 1 | 1 | 23846-1 | SPRING, DIE | 12 |
| | - | 1 | 1 | 240833-2 | PLATE, REAR SHEAR | 11 |
| 1 | - | 1 | 1 | 1-690482-0 | PLATE, FRONT SHEAR | 9 |
| 1 | 1 | 2 | 1 | 1333219-3 | ANVIL, COMBINATION | 8 |
| 1 | - | 1 | 1 | 690474-3 | BLADE, SLUG | 7 |
| | - | 1 | 1 | 1-455892-1 | HOLD DOWN, TERMINAL | 6 |
| | - | 1 | 1 | 4-240641-1 | SPACER | 5 |
| | - | 1 | 1 | 238009-1 | BLOCK, FL CRIMPER SPACER | 4 |
| 1 | 1 | 2 | 1 | 1633569-8 | CRIMPER, INSULATION OVERLAP | 3 |
| | - | 1 | 1 | 1-455888-0 | SPACER, CRIMPER | 2 |
| 1 | 1 | 2 | 1 | 456408-5 | CRIMPER, WIRE PREMIUM | 1 |
| | -77 | -71 | -1 | PART NO | DESCRIPTION | ITEM NO |

VIEW B ROTATED 180°

POST-FEED 40mm STROKE

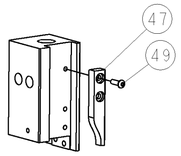


POST-FEED 30mm STROKE

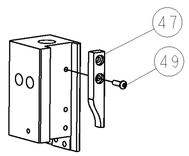


## * WARNING

ON INSTALLATION, SET WIRE DISC TO LARGEST WIRE SIZE SETTING. USE OF SETTINGS BELOW MIN. REQUIRED CRIMP HEIGHT SETTING WILL CAUSE DAMAGE TO CRIMP TOOLING.

AMP 4805 REV 31MAR2000

Pro/ENGINEER DRAWING

THIS DRAWING IS A CONTROLLED DOCUMENT OF TYCO ELECTRONICS CORPORATION. IT IS SUBJECT TO CHANGE WITHOUT NOTICE. ANY QUESTIONS REGARDING THIS ORGANIZATION SHOULD BE CONTACTED FOR THE LATEST REVISION.

DIMENSIONS: INCHES

TOLERANCES UNLESS OTHERWISE SPECIFIED:
0 PLC ±-
1 PLC ±0.1
2 PLC ±0.01
3 PLC ±0.001
4 PLC ±0.0001
ANGLES ±-

MATERIAL - -

FINISH - -

DWN M BETTISS 28APR2008
CHK - -
APVD M CLIFFORD 28APR2008
PRODUCT SPEC -
APPLICATION SPEC - -
WEIGHT -

Tyco Electronics
Tyco Electronics
Harrisburg, PA 17105-3608

NAME FINE ADJUST END FEED HDI APPLICATOR -

| SIZE | CAGE CODE | DRAWING NO | RESTRICTED TO |
|---|---|---|---|
| A1 | 00779 | C-1529273 | - |

CUSTOMER DRAWING SCALE 3:5 SHEET 1 OF 1 REV A

CUSTOMER VIEWABLE ASSEMBLY