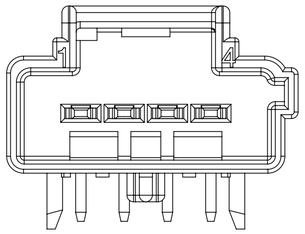

CODING

GREY	0987731018
COLOR	MOLEX P/N

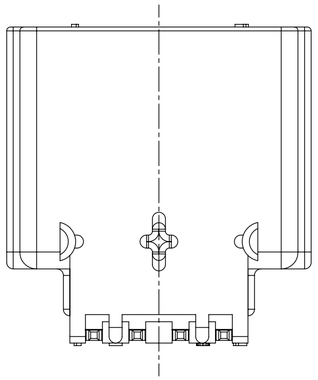

HEADER SUPPORT HOLE DIMENSION

THICKNESS OF PRINTED CIRCUIT 1.6±0.16

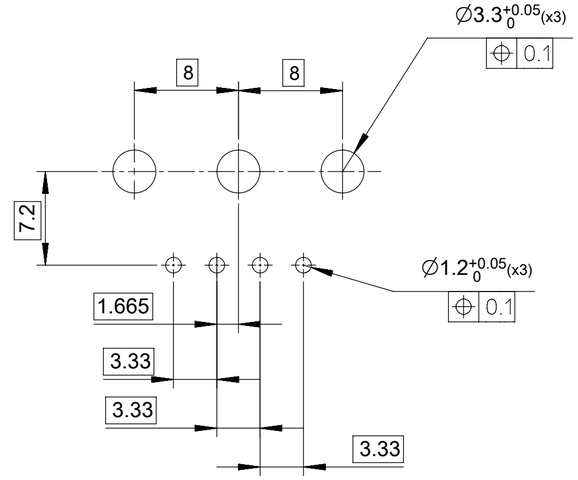

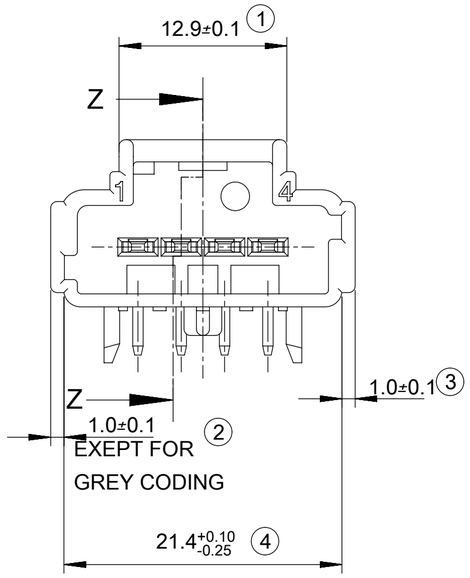

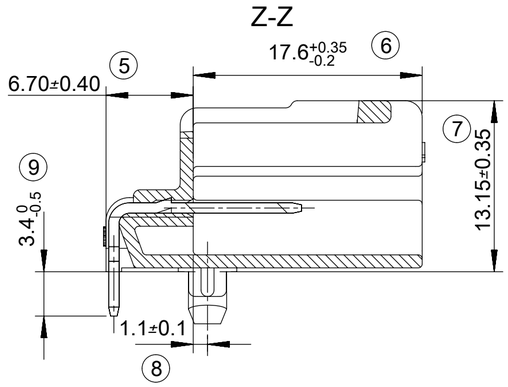

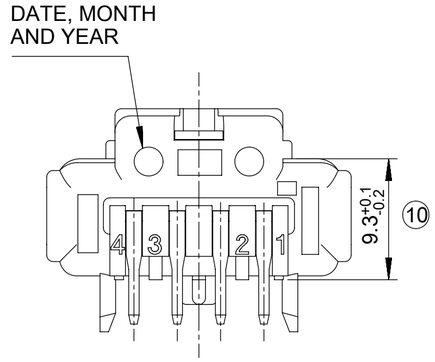

NOTE:

PACKAGING : PK-98773-001

APPLICATION SPEC : AS-98773-001

ITEM	QTY	DESCRIPTION	MATERIAL	WEIGHT
2	4	PIN 1.5 X 0.8	C19400-TIN PLATED	2.73 g
1	1	HEADER 1.5X0.8 4CKT	>PA66<	

INSPECTION BALLOON NUMBER LOG
PER DRAWING REVISION:A
LAST BALLOON NUMBER USED: 10
ADDED BALLOON NUMBERS:
REMOVED BALLOON NUMBERS:

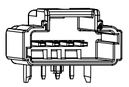

SCALE 1:1

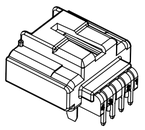

DOCUMENT STATUS	P1	RELEASE DATE	2019/11/11 02:36:07

THIS DRAWING CONTAINS INFORMATION THAT IS PROPRIETARY TO MOLEX ELECTRONIC TECHNOLOGIES, LLC AND SHOULD NOT BE USED WITHOUT WRITTEN PERMISSION

DIMENSION UNITS	SCALE
mm	3:1

GENERAL TOLERANCES (UNLESS SPECIFIED)

	MM	INCH
4 PLACES	±	±
3 PLACES	±	±
2 PLACES	± 0.2	±
1 PLACE	± 0.2	±
0 PLACES	± 0.2	±
ANGULAR TOL	± 3.0 °	

DRAFT WHERE APPLICABLE MUST REMAIN WITHIN DIMENSIONS

CURRENT REV DESC:

EC NO: 624787

DRWN:	VLOKESHA	2019/05/29
CHK'D:	GGA	2019/11/11
APPR:	GGA	2019/11/11

INITIAL REVISION:

DRWN:	VJOUAS	2012/04/10
APPR:	OPLESSIS	2012/04/20

FIRST ANGLE PROJECTION | DRAWING: A2-SIZE | SERIES: 98773

molex

HEADER W/ 1.5X0.8 4CKT

PRODUCT CUSTOMER DRAWING

DOCUMENT NUMBER	DOC TYPE	DOC PART	REVISION
SD-98773-001	PSD	001	C

MATERIAL NUMBER	CUSTOMER	SHEET NUMBER
987731018	GENERAL MARKET	1 OF 1