REVISION HISTORY				
ECO	REV	DESCRIPTION	DATE	APPROVED
	0	1st PROTOTYPE	<DATE>	<APPROVED>
	2	Value Change: R4, R6, C5, C6	04/16/07	David Canny

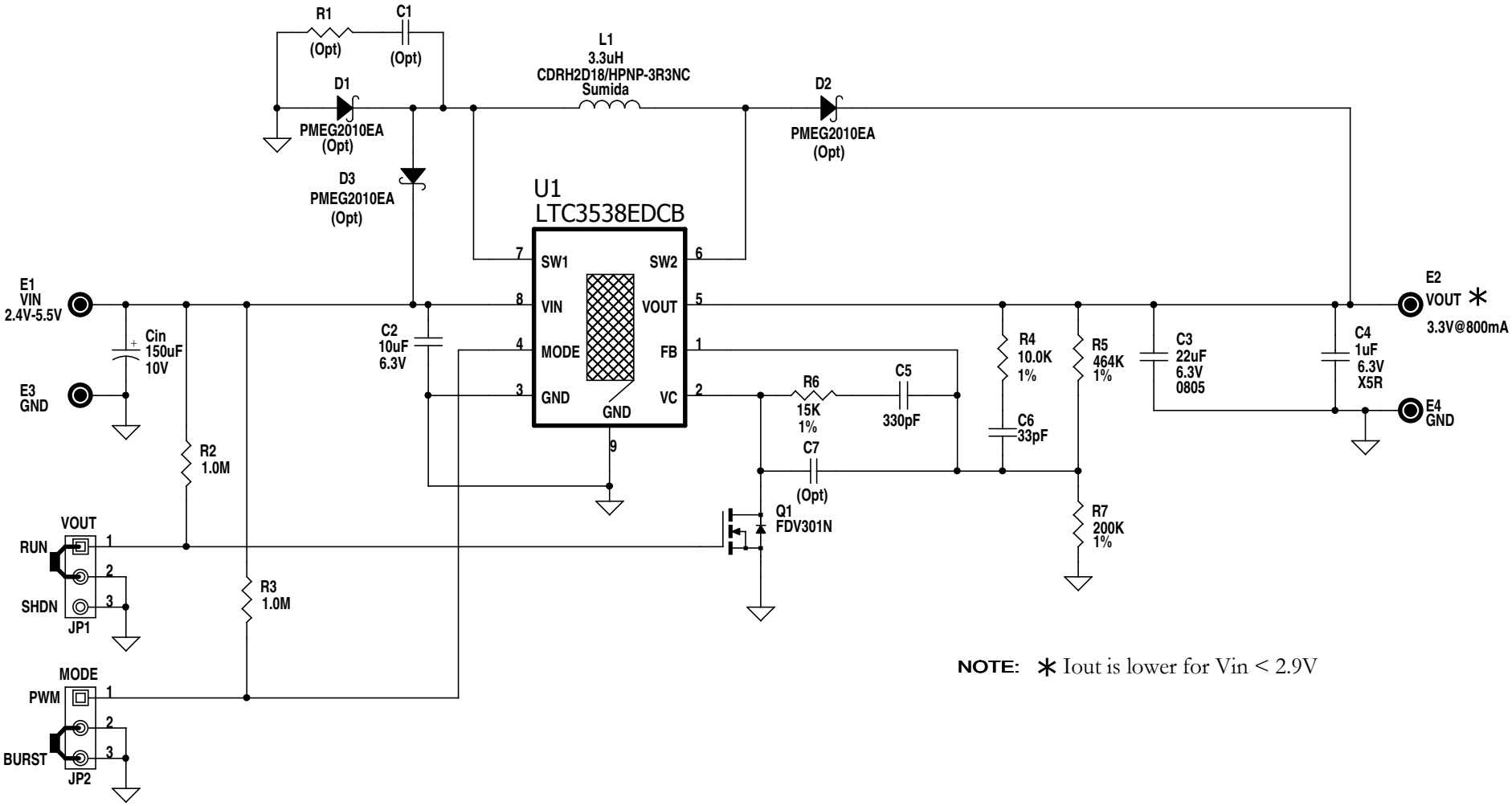

NOTE: * Iout is lower for Vin < 2.9V

This circuit is proprietary to Linear Technology and supplied for use with Linear Technology parts.
Customer Notice: Linear Technology has made a best effort to design a circuit that meets customer-supplied specifications; however, it remains the customers responsibility to verify proper and reliable operation in the actual application, Component substitution and printed circuit board layout may significantly affect circuit performance or reliability. Contact Linear Applications Engineering for assistance.

APPROVALS

DRAWN: Rudy Bautista
ENGINEER: David Canny
APPROVED:
CHECKED:

LINEAR TECHNOLOGY CORPORATION
1630 McCARTHY BLVD
MILPITAS, CA. 95035
(408)432-1900
(408)434-0507 (FAX)
www.linear.com

LTC Confidential - For Customer Use Only

Title: **Buck-Boost Synchronous Converter**

Size | Document Number: **Demo Circuit 1095A** | Rev 2

Date: Thursday, August 09, 2007 | C:\ORCADWIN\CAPTURE\1095A\1095A_REV2.DSN | Sheet 1 of 1