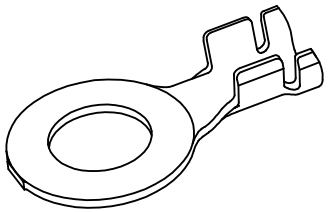

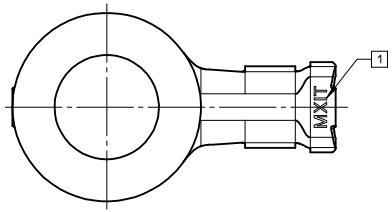

SECTIONS

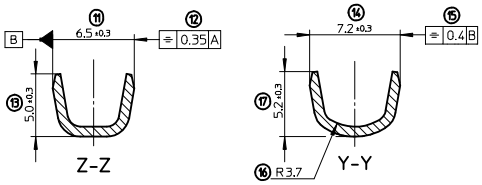

PACKAGING

STANDARD REEL
PARTS PER REEL : 3500

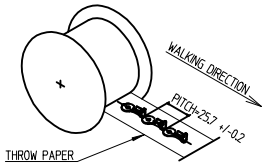

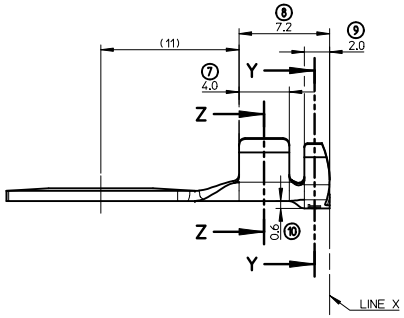

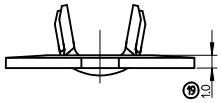

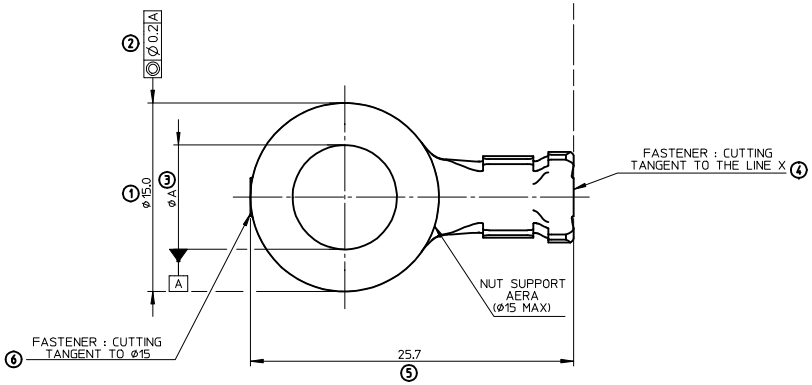

MARKING :

1 - ENGINEERING CONTROL ID

NOTES :

1 - MATERIAL : BRASS THICKNESS 0.8 MM 18
2 - PLATING : PRE-TIN PLATED
3 - CRIMPING RANGE (mm2) : 1.4 TO 3
4 - PACKAGING : PARTS DELIVERED ON STRIP (SEE VIEW)

INSPECTION BALLOON NUMBER LOG

PER DRAWING REVISION : B
LAST BALLOON NUMBER USED : 18
ADDED BALLOON NUMBERS : 19
REMOVED BALLOON NUMBERS : NONE

REV	DESCRIPTION
B	REDRAW P/N 0988601149 WITH CINCH STATUS ADD DIM#19 : 1.0 ±0.2
A	FIRST RELEASE

PART SHOWN : 0988601149

PART NUMBER	ØA ±0.1
0988601159	6.3
0988601149	8.4

REVISED / REDRAW
EC NO: G2013-0151 2017/07/06
DRWN:PBOSQUAIN 2017/07/07
CHKD:JDUCLOS 2017/09/28
APPR:OPLESSIS
REV B

QUALITY SYMBOLS: =0

GENERAL TOLERANCES (UNLESS SPECIFIED)

	mm	INCH
4 PLACES	±---	±---
3 PLACES	±---	±---
2 PLACES	±---	±---
1 PLACE	±0.2	±---
0 PLACE	±---	±---
ANGULAR	±---°	

DRAFT WHERE APPLICABLE MUST REMAIN WITHIN DIMENSIONS

DIMENSION STYLE: MM ONLY
SCALE: 5:1
DESIGN UNITS: METRIC
FIRST ANGLE PROJECTION

DRAWN BY: PBOSQUAIN DATE: 2012/12/18
CHECKED BY: JDUCLOS DATE: 2012/12/18
APPROVED BY: OPLESSIS DATE: 2013/04/10

TITLE: RING TERMINAL 6-8X15X0.8 1.4-3

molex

MATERIAL NO.: SEE CHART
DOCUMENT NO.: SD-98860-005
SHEET NO.: 1 OF 1
SIZE: A1

THIS DRAWING CONTAINS INFORMATION THAT IS PROPRIETARY TO MOLEX INCORPORATED AND SHOULD NOT BE USED WITHOUT WRITTEN PERMISSION