MATERIAL NO.	ENGINEERING NO.	FINISHED LENGTH
1201150040	803N601	5M (16.4 FT 4.85 IN)

NOTES:
1. MATERIAL: AS NOTED
2. FINISH: AS NOTED
3. ELECTRICAL:
   VOLTAGE RATING.: 10-30 VDC
   CURRENT: 4A
4. TEMP RATING: -20°C TO +80°C
5. PROTECTION: IP67 (WHEN MATED)
6. ALL DIMS ARE FOR REFERENCE UNLESS NOTED OTHERWISE.

DUST PROTECTOR	BLANKING PLUG	MPIS ID LABEL
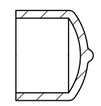		
1201160026 (70-1710)	1203090067 (BG12103)	1203080681 (BG12490)

PARTS NOTED ABOVE ARE PACKED UNASSEMBLED WITH FINISHED ASSEMBLY

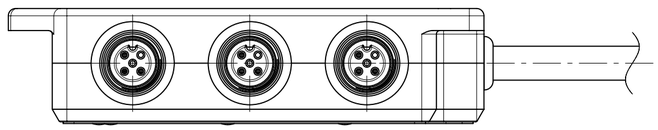

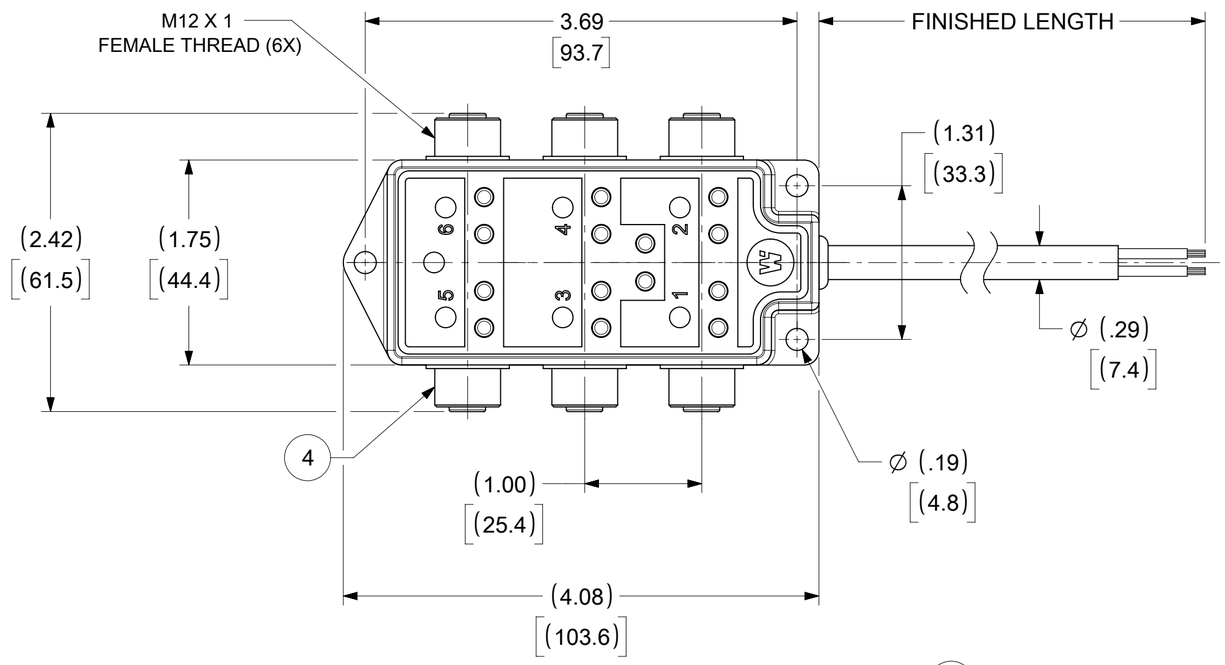

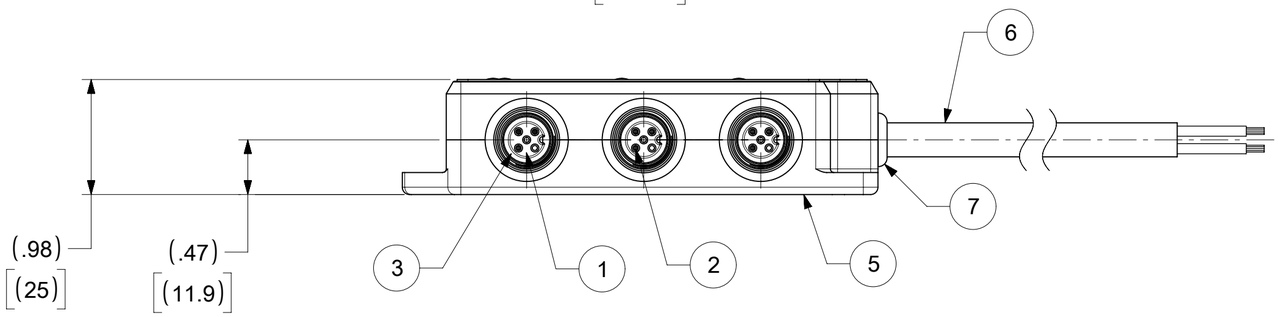

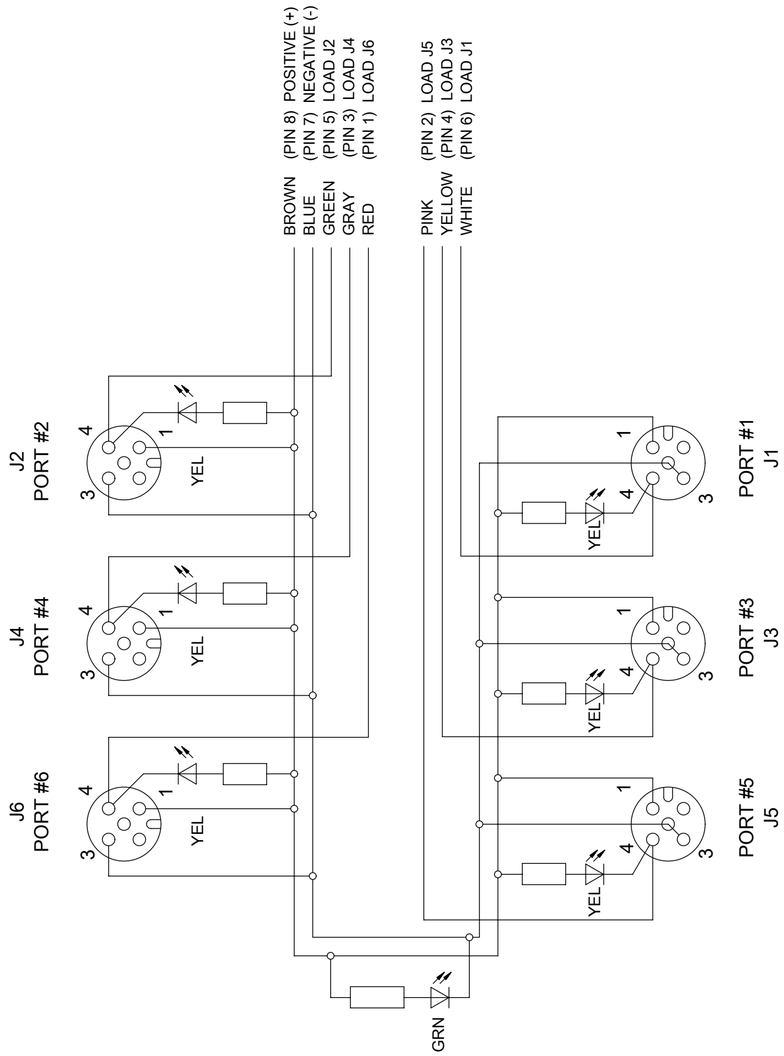

WIRING SCHEMATIC

NOTE: KEYWAY ORIENTATION SHOWN IN WIRING SCHEMATIC DOES NOT REFLECT THE ACTUAL KEYWAY ON THE PRODUCT.

ITEM	DESCRIPTION	MATERIAL	FINISH
7	GROMMET	NITRILE	BLACK
6	CABLE	PVC JACKET	YELLOW
5	HOUSING, 8 PORT	NYLON	YELLOW
4	RECEPTACLE SHELL	ZINC DIE-CAST	BLACK E-COAT
3	O-RING	NITRILE	RED
2	CONTACT SOCKET	COPPER ALLOY	GOLD PLATED
1	INSERT	NYLON	BLACK

DOCUMENT STATUS	P1	RELEASE DATE	2023/05/03	23:06:21

CABLE LENGTH TOLERANCES
<.3M [1FT]: +19mm-0 [+.75in-0]
.3 - .9M [1 - 3FT]: +44.5mm-0 [+1.75in-0]
.9 - 1.8M [3 - 6FT]: +55.6mm-0 [+2.19in-0]
1.8 - 3.7M [6 - 12FT: +88.9mm-0 [+3.50in-0]
3.7 - 7.3M [12 - 24FT]: +165.1mm-0 [+6.50in-0]
7.3-14.6M [24 - 48FT]: +317.5mm-0 [+12.50in-0]
14.6 - 30.5M [48-100FT]: +622.3mm-0 [+24.50in-0]
OVER 30M [100FT] +2% OF FINISHED LENGTH

THIS DRAWING CONTAINS INFORMATION THAT IS PROPRIETARY TO MOLEX ELECTRONIC TECHNOLOGIES, LLC AND SHOULD NOT BE USED WITHOUT WRITTEN PERMISSION

FUNCTIONAL SYMBOLS: FA = 0, FC = 0, FP = 0
DIVISIONAL SYMBOLS

DIMENSION UNITS: INCH[MM] | SCALE: NTS

GENERAL TOLERANCES (UNLESS SPECIFIED)

	MM	INCH
4 PLACES	±	±
3 PLACES	±	±
2 PLACES	±	±
1 PLACE	±	±
0 PLACES	±	±
ANGULAR TOL	± °	

DRAFT WHERE APPLICABLE MUST REMAIN WITHIN DIMENSIONS

CURRENT REV DESC: DOCUMENT WAS IN AUTOCAD - RECREATED IT IN NX. OVERMOLD WERE PVC. ADDED KEYWAY ORIENTATION NOTE AND LABEL VIEW.

EC NO: 747740
DRWN: VBASUTHKARP 2023/05/02
CHK'D: MBRZOZOWSKI 2023/05/03
APPR: BWOODMAN 2023/05/03

INITIAL REVISION:
DRWN: ULETTENMEIER 2018/06/25
APPR: RSILLER 2018/06/26

molex

MICRO-CHANGE MPIS
6 PORT SIDE MOUNT NPN PVC CABLE

PRODUCT CUSTOMER DRAWING

DOCUMENT NUMBER	DOC TYPE	DOC PART	REVISION
1201150040	PSD	000	B1

THIRD ANGLE PROJECTION	DRAWING	SERIES	MATERIAL NUMBER	CUSTOMER	SHEET NUMBER
	C-SIZE	120115	SEE TABLE	GENERAL M;ARKET	1 OF 1