MODEL NO.	PACKAGING
134-1000-024	ONE PCS PER BAG

REV	ECO	DATE
001	ECO-17-0033	12/18/2017
002	ECO-18-0020	08/21/2018

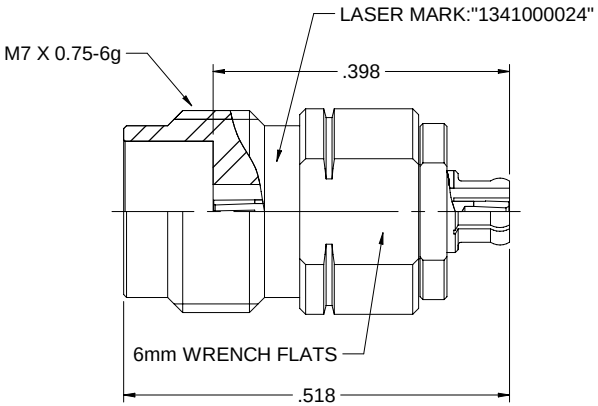

NOTES: UNLESS OTHERWISE SPECIFIED

1. MATERIAL & FINISH:
   1.1 BODY: PASSIVATED STAINLESS STEEL
   1.2 CONTACT PIN& CONTACT BODY: GOLD PLATED BERYLLIUM COPPER
   1.3 INSULATOR: ULTEM 1000 AMBER

2. ELECTRICAL:
   2.1 IMPEDANCE: 50 OHMS
   2.2 FREQUENCY RANGE: DC-67 GHz
   2.3 VOLTAGE STANDING WAVE RATIO: 1.25 MAX
   2.4 CONTACT RESISTANCE: CENTER CONTACT: 6 MILLIOHMS MAX
   OUTER CONTACT: 2.5 MILLIOHMS MAX
   2.5 DIELECTRIC WITHSTANDING VOLTAGE: 325VRMS MIN
   2.6 INSULATION RESISTANCE: 5000 MOHM MIN

3. MECHANICAL:
   3.1 ENGAGEMENT FORCE: 0.23 NM MAX (1.85MM)
   FULL DETENT: 19 N MAX,SMOOTH BORE: 11 N MAX (SMPM)
   3.2 DISENGAGEMENT FORCE: 0.23 NM MAX (1.85MM)
   FULL DETENT: 29 N MAX, SMOOTH BORE: 11N MAX (SMPM)
   3.3 CONTACT RETENTION: 20 N MIN
   3.4 DURABILITY: 500 CYCLES MIN (1.85MM)
   FULL DETENT: 100 CYCLES MIN, SMOOTH BORE:500 CYCLES MIN (SMPM)

4. ENVIRONMENT:
   4.1 THERMAL SHOCK: MIL-STD-202, METHOD 107, CONDITION B.
   4.2 OPERATING TEMPERATURE: -65 TO 165°C
   4.3 SHOCK: MIL-STD-202, METHOD 213, CONDITION I
   4.4 VIBRATION: MIL-STD-202, METHOD 204, CONDITION D
   4.5 MOISTURE RESISTANCE: MIL-STD-202, METHOD 106

cinch
THIS PROPRIETARY DOCUMENT is property of Cinch Connectivity Solutions. Reproduction, in whole or in part, not permitted, and by receipt or possession, you agree to understanding that it is not to be disclosed to others or used for purposes other than those stated herein.
INTERPRET DRAWING IN ACCORDANCE WITH ASME Y14.5-2009.

Model No. 134-1000-024		Johnson
RoHS2 ☑ 2011/65/EU	Cage Code	Title: ADAPTER ASSEMBLY,1.85mm JACK TO SMPM JACK
UNLESS OTHERWISE SPECIFIED UNITS INCH	3RD ANGLE PROJECTION	Drawing No. 134-1000-024 — Rev. 002
.XXX ±.02 .XXXX ±.01 ANGLES ±5°	Drawn By: Betty.Yu	
	Date: 08/21/2018	Size C — DO NOT SCALE DRAWING — Workmanship Std: NONE — Sheet 1 of 1