© 2006 TE Connectivity. All Rights Reserved.

REVISIONS					
P	LTR	DESCRIPTION	DATE	DWN	APVD
	D	REVISED PER ECR-21-002336	24FEB2021	RZ	RS

NOTES:

1. PACK IN ACCORDANCE WITH AMP SPEC 107-3275
2. 100 TRAY PACK IN ACCORDANCE WITH AMP SPEC 107-3275
3. Au PLATING

4 ELECTRICAL CHARACTERISTICS

FREQUENCY RANGE:	DC – 4 GHz
NOMINAL IMPEDANCE:	50 Ohm
INSULATION RESISTANCE:	1000 MOhm
WORKING VOLTAGE:	250 Volts RMS at Sea Level
DIELECTRIC WITHSTAND VOLTAGE:	750 Volts RMS Max
CONTACT RESISTANCE:	
CENTRE CONTACT:	6.00 mOhm Max
OUTER CONTACT:	1.00 mOhm Max

5 MECHANICAL CHARACTERISTICS

MOUNT NUT RECOMMENDED TORQUE:	0.75N
DURABILITY:	500 Cycles Min

6 ENVIRONMENTAL CHARACTERISTICS

OPERATING TEMPERATURE:	–65 to +165 DegC

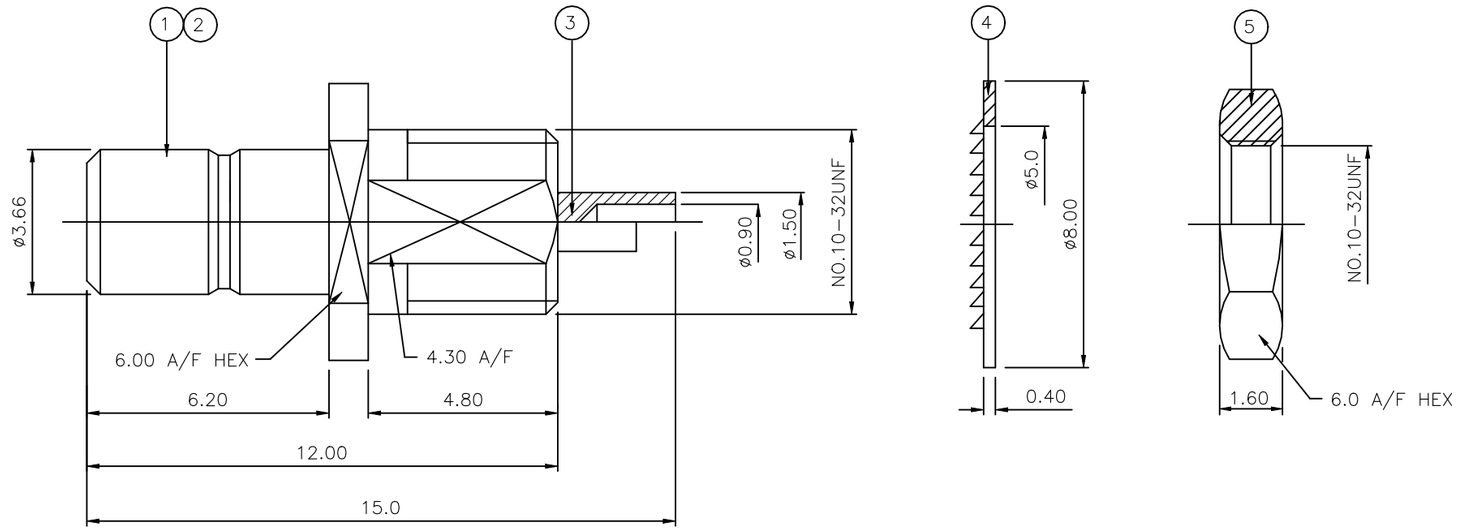

		1	1	BRASS 3	HEX NUT	5
		1	1	BRASS 3	LOCKWASHER	4
		1	1	BRASS 3	CONTACT	3
		1	1	PTFE	INSULATION	2
		1	1	BRASS 3	BODY	1
		6--0	1--0	MATERIAL	DESCRIPTION	ITEM
		2	1			
QUANTITY PER ASSY				PARTS LIST		

THIS DRAWING IS A CONTROLLED DOCUMENT.

DIMENSIONS: mm

TOLERANCES UNLESS OTHERWISE SPECIFIED:

0 PLC	± –
1 PLC	± 0.30
2 PLC	± 0.15
3 PLC	± –
4 PLC	± –
ANGLES	± 5

MATERIAL: SEE TABLE

FINISH: –

DWN	J.SANDWELL	12JAN06
CHK	S.PARLOW	12JAN06
APVD	F.WHEELER-KING	12JAN06
PRODUCT SPEC	—	
APPLICATION SPEC	—	
WEIGHT	0.000000	

TE Connectivity

NAME: SMB BULKHEAD SOCKET FRONT MOUNT 50 OHM
–
–

SIZE	CAGE CODE	DRAWING NO	RESTRICTED TO
A3	00779	C-1337480	—

CUSTOMER DRAWING

SCALE	SHEET	REV
NTS	1 OF 1	D

1470-19 (1/15)