THIS COPY IS PROVIDED ON A RESTRICTED BASIS AND IS NOT TO BE USED IN ANY WAY DETRIMENTAL TO THE INTERESTS OF PANDUIT CORP.

P1 CASSETTE PART NO.	MATERIAL	'A' +/-.015 [+/-.38]	'B' +/-.015 [+/-.38]	'C' +/-.015 [+/-0.38]	CASSETTE LABELS/ROLL
C195X040Y1M	GMY9-E	1.642 [41.7]	0.400 [10.16]	1.950 [49.53]	125
C261X035Y1M			0.350 [8.89]	2.610 [66.29]	100

NOTE:
1. MILLIMETERS ARE IN [ ].

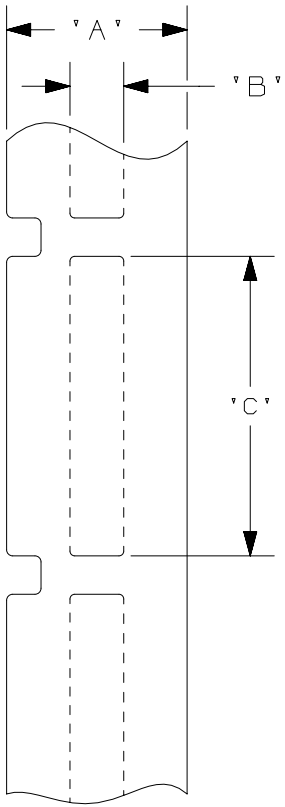

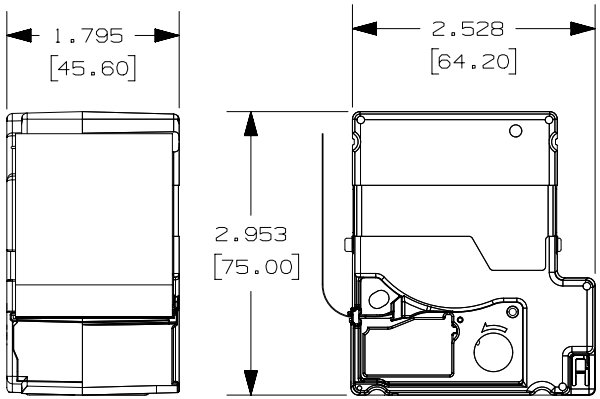

REV	DATE	BY	CHK	APR	DESCRIPTION	ECN
0	9/29/2020	RVU	JW	JHAC	DRAWING RELEASE.	GAECN04938

TITLE

MP Comp Label

CUSTOMER DRAWING

ITEM REVISION NAME: I00743XG/00

DATASET FILE NAME: I00743XG_DC/00

UNLESS OTHERWISE SPECIFIED, DIMENSIONAL TOLERANCES ARE: IN [mm]

.X ± .1 [2.54] .XXX ± .025 [.635]

.XX ± .05 [1.27] ANGLES ±

THIRD ANGLE PROJECTION

MATERIAL: SEE TABLE

DRAWING NUMBER: I00743XG_DC

DRAWN BY	DATE	CHK	SCALE	SIZE
RVU	7/10/19	JHAC	NTS	A

SHT 1 OF 1

D10100DA/20