THIS DRAWING CONTAINS INFORMATION THAT IS PROPRIETARY TO J.S.T. AND SHALL NOT BE USED OR SHOWN WITHOUT WRITTEN PERMISSION.

ITEM	CONNECTOR PART NO.	DESCRIPTION
1	SVM-61T-P2.0	VL CONNECTOR - MALE CONTACT
2	UL1015, 14 AWG	BLACK

IPI CHECK	EOR CHECK

Applicable Tooling
APPLICATOR

Applicable Housings

NO. OF CIRCUITS	HOUSING PART NO. WITH PANEL LOCKS	HOUSING PART NO. WITHOUT PANEL LOCKS
1	-	VLR-01VF
2	VLR-02V	VLR-02VF
3	VLR-03V	-
4	VLR-04V	VLR-04VF
4	VLR-04VN	-
6	VLR-06V	-
8	VLR-08V	-
12	VLR-12V	-

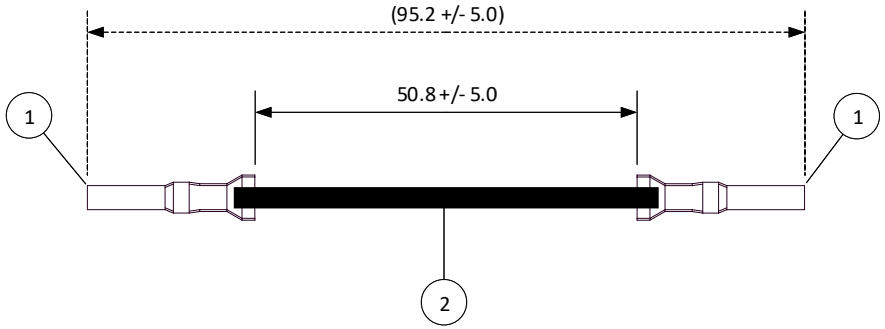

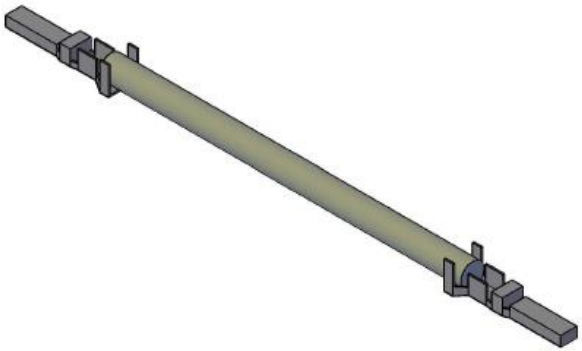

REV.	DESCRIPTION	DATE	BY

SCALE 1: 1	CUSTOMER NAME	CUSTOMER PART NO.
DIMENSIONS All dimensions are in MM with a tolerance of +/- 3.0 unless otherwise specified.	DESCRIPTION 6.2 mm Pitch VL Series Standard Leads - 2" Inside Length DOUBLE-END LEADS, M-M	
DRAWN BY STEVEN PILKINGTON	ASSEMBLY PART NO. ASVMSVM14K51	
CHECKED BY JUSTIN BAKER	DRAWING NO. & REVISION GAM-094	REVISED 3/9/2016