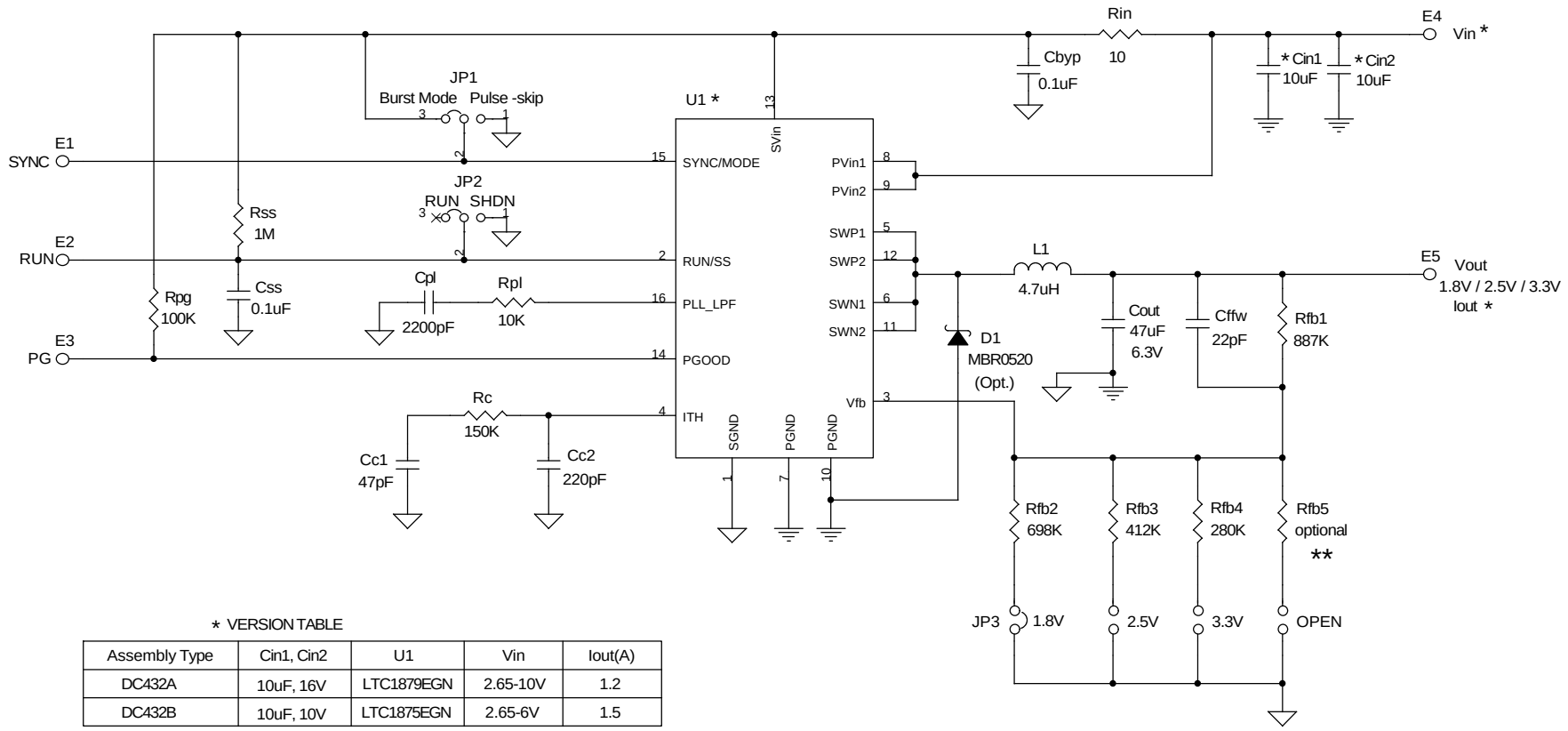

* VERSION TABLE

Assembly Type	Cin1, Cin2	U1	Vin	Iout(A)
DC432A	10uF, 16V	LTC1879EGN	2.65-10V	1.2
DC432B	10uF, 10V	LTC1875EGN	2.65-6V	1.5

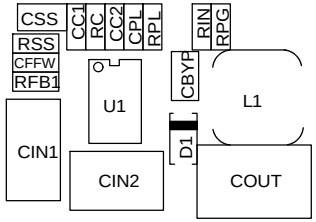

PCB SILKSCREEN

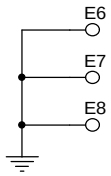

** Space Provided for an Optional Resistor to Program a Custom Output Voltage.

CONTRACT NO.		
APPROVALS		DATE
DRAWN	June Wu	5/22/01
CHECKED		
APPROVED		
ENGINEER	TOM GROSS	5/22/01
DESIGNER		
Wednesday, June 05, 2002		

LINEAR TECHNOLOGY
1630 McCarthy Blvd.
Milpitas, CA 95035
Phone: (408)432-1900
Fax: (408)434-0507

TITLE

LTC1879EGN/LTC1875EGN, High Efficiency Synchronous Step-Down Regulator

SIZE	CAGE CODE	DWG NO	REV
		Demo Circuit 432A / 432B	A

SCALE: FILENAME: SHEET 1 OF 1