THIS DOCUMENT IS THE PROPERTY OF KEYSTONE ELECTRONICS CORP. AND SHALL NOT BE REPRODUCED, DISTRIBUTED OR USED AS A BASIS FOR MANUFACTURE WITHOUT PRIOR WRITTEN PERMISSION FROM KEYSTONE ELECTRONICS CORP.

ACTUAL SIZE

P/N 8804

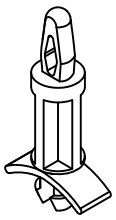

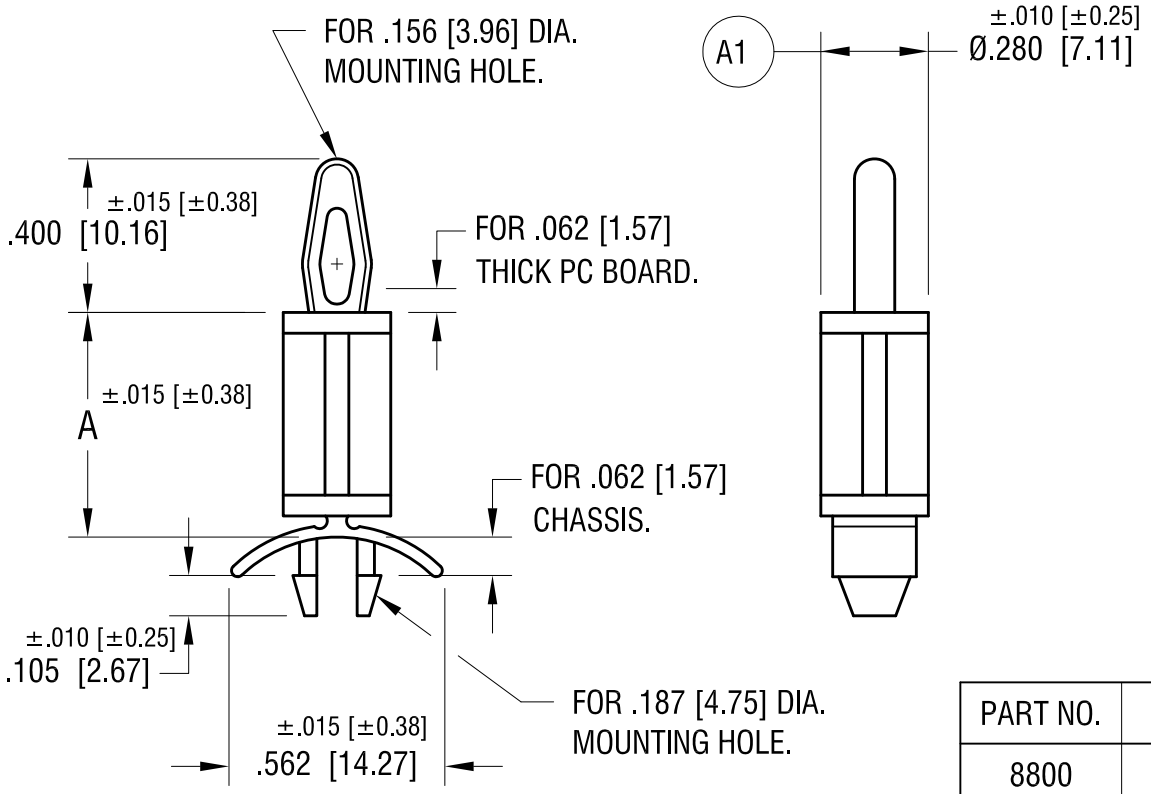

PART NO.	'A' DIM.
8800	.187 [4.74]
8801	.250 [6.35]
8802	.375 [9.52]
8803	.500 [12.70]
8804	.625 [15.87]
8805	.750 [19.05]
8806	.875 [22.22]

A1 WAS .280±.005

DATE	DESCRIPTION	REV.
8.19.21	CHANGE AS PER ECN 21–089	A

KEYSTONE ELECTRONICS CORP.

www.keyelco.com • NEW HYDE PARK, NY 11040 • Tel (516) 328-7500

PART NAME: PC TENSION-FIT SUPPORT

MATERIAL: NYLON 6/6, UL 94V-0

FINISH: NONE

DRN BY: BOONE | DATE: 8.25.95

APP'D: RH | SCALE: 2X

TOLERANCES UNLESS OTHERWISE SPECIFIED — INCH [MM]
DECIMAL ± .005 [± 0.13]
ANGULAR ± 1°

CODE: C

DWG NO. 8800-8806